elero

CONTROL CATALOGUE

Drives and controls

for intelligent building technology

Made in Germany

elero is a premium supplier of automation systems for roller shutters, sun protections and doors. Highest product quality, high-end technologies and innovative product solutions are achieved through development and manufacturing competence. As the only manufacturer who develops and manufacture in Germany, we offer intelligent and durable building automation that is plain to see. Every product is subjected to strict quality control, and manufactured according to the current state of the art. For this reason, the products are extremely reliable and long-lived – and that, with a good price-performance ratio!

The success story began 50 years ago with a simple but "electrifying" idea:

Never again raising roller shutters by hand – this simple thought marked the start for elero in 1964. Since then the company name has been synonymous with a mission: making roller shutters, awnings, venetian blinds and rolling doors roll electrically at the push of a button.

The Workshop from back then has become a global player that regularly sets new standards in home automation, whether in 1984 with the first electronic timer or in 1992 with the automatic controller that follows the yearly course of the sun. In 2009 elero presented the "ProLine 2", the fi rst bidirectional Radio system with routing function. Centero has enabled the simple and convenient control of building services by smartphone or tablet PC since 2013.

Today, over 50 years after the establishment of the company, elero employs over 400 staff with branches all over the world and is still as innovative as it was on the very first day.

ProLine and ProLine 2

Simply clever controls

Becoming a global player with a simple idea

ProLine control units open and close roller shutters and sun protection systems automatically with wind and sun sensors as well as with timers.

Technical perfection, high quality standards and inno vative design are the outstanding features of this control generation. Further advantages are the easy operation, large Push-buttons and a clear display. The modular structure of the control components makes even the most complicated tasks easy. Of course, the wall units can be connected easily and are suitable for all current switch programmes.

There are wired control units and radio control units with the frequency 868/915 MHz. The bidirectional radio system “ProLine 2” has special advantages which you can find in our brochures or on our homepage. Bidirectional radio components are labeled correspondingly. ProLine control units can be used either as individual or as group/central controls.

Important! Please observe the operation instructions of the corresponding control unit!

6 **Functions overview**

Hardwired control units

10 **AeroTec**
the control unit for sun protection systems

11 **AstroTec**
the convenient timer

12 **TempoTec**
the simple timer

13 **MemoTec**
the intelligent switch

14 **VarioTec**
the variable control unit

15 **MonoTec**
the intelligent switch

16 **AeroControl**
the control unit for sun protection systems

17 **TimeTec**
day and week time switch

Project control units

18 **Objecta**
ProLine comfort control

19 **Zentralsteuergeräte**
special Controls

Hardwired Sensors

20 **Lumo / Lumero**
the light and twilight sensor

21 **Aero**
the light and wind sensor

22 **Ventero**
the wind sensor

23 **Aquero**
the rain sensor for sun protection systems

Home automation

26 **Centero**
centralized building automation from elero

27 **Peripheral devices for the Centero**
from the company Eldat

Radio hand-held transmitters

28 **TempoTel 2**
the radio hand-held transmitter with integrated timer

29 **MultiTel 2**
the convenient 15 channel radio hand-held transmitter

30 **VarioTel 2**
the 5 + 1 channel radio hand-held transmitter

31 **LumeroTel 2**
the radio hand-held transmitter for sun protection systems

32 **MonoTel 2**
the simple hand-held transmitter

33 **SoloTel 2**
the elegant wall-mounted / hand-held transmitter

Radio control units

34 **MultiTec Touch-868**
the multi-talent for operating your building technology

35 **AstroTec-868 / -868 bidi**
the convenient wall-mounted transmitter

36 **MemoTec-868**
the intelligent wall-mounted transmitter

37 **UniTec-868 / UniClic-868**
1 channel wall sender

38 **Invio-868**
the flush mount radio transmitter

Radio receivers

39 **VarioTec-868**
the radio receiver for roller shutters and sun protection systems

40 **AeroControl-868**
control unit for awnings and venetian blinds

41 **Revio-868**
the built-in receiver for drives

42 **Revio-868 P**
the potential-free built-in receiver for drives

43 **Revio-868 SW**
built-in radio receiver for switchable electrical loads

44 **Unio-868**
Radio power socket

45 **Combio-868 JA / JA Pulse**
the radio receivers for venetian blinds

46 **Combio-868 JA DC**
the radio receiver for solar drive systems

47 **Combio-868 RM / RevoLine**
the radio receivers for tubular drives

48 **Combio-868 HE**
the radio receiver for heating systems up to 2 kW

49 **Combio-868 LI / SW**
the radio receivers for light sources

Radio sensors

50 **Sensero-868 AC / -868 AC Plus**
the sensor for sun protection systems

51 **Aero-868 / -868 Plus / -868 AC**
the sun and wind sensor

52 **Ventero-868**
Radio sensor for wind

53 **Protero-868**
wireless vibration sensor

54 **Lumero-868**
solar powered, radio operated light sensor
for awnings and venetian blinds

55 **Lumo-868**
the sensor for light, twilight and glass breakage

58 **Individual applications**

60 **Group control**

77 **Radio control**

Functions overview controls and Sensor technology

	Page	Roller shutters / Interior shading	Awnings / External shading	Venetian blinds	Switching lights	Heating	Switching of mains voltage (230 V)	Switching of low voltage (< 6 V)	Radio transmitter, number of channels	Radio receiver	Requires 230 V connection	External inputs / Building automation system / Audio visual system integration	Manual / automatic sliding switch	Integrated operation buttons	24-hour and 7-day basic timer	Astro, sun set timer (or weekly timer)	Astro, sun rise timer (or weekly timer)	Astro shift (user adjustable)	City selection (156 locations)	Longitude / latitude degree adjustable	Time adjustable	Use as weekly timer (1× up and 1× down each day)	2nd weekly timer (1× up and 1× down each day)	Offset (offset command, based on first set timer)
AeroTec	10	○	•	•			•	•			•	•	•	•								•		
AstroTec	11	•	○	•	•		•	•			•	•	•	•		•	•	•	•	•	•	•	•	•
TempoTec	12	•	○	•			•				•		•	•		•		•	•	•	•	•		
MemoTec	13	•	○	○			•				•		•	•	•									
VarioTec	14	•	•	•			•	•			•	•	•	•										
MonoTec	15	•	•	•				•						•										
AeroControl	16		•	•			•				•													
TimeTec	17	•					•				•		•	•								•		
Lumo	20	•																						
Lumero	20	•	•	•																				
Aero	21		•	•																				
Ventero	22		•	•																				
Aquero	23		•																					
Centero	26	•	•	•	•	•			15[1]		•		•	•	•	•	•	•	•	•	•	•	•	
TempoTel 2 *	28	•	○	•	•	○			10				•	•		•	•	•	•	•	•	•	○	
MultiTel 2	29	•	•	•	•	•			15				•	•										
VarioTel 2	30	•	•	•	•	•			5				•	•										
LumeroTel 2	31	•	•	•	•	•			1				•	•										
MonoTel 2	32	•	○	○	•	•			1					•										
SoloTel 2	33	•	○	○	•	•			1					•										
MultiTec Touch-868	34	•	•	•	•	•			20		•		•	•		•	•	•	•	•	•	•	○	
AstroTec-868	35	•	○	•	•				1				•	•		•	•	•	•	•	•	•	•	•
AstroTec-868 bidi	35	•	○	•	•	•			1				•	•		•	•	•	•	•	•	•	•	•
MemoTec-868	36	•	○	•	•	○			1				•	•	•									
UniTec-868	37	•	•	•	•	•			1				•	•										
Invio-868	38	•	•	•	•	•			1		•	•												
VarioTec-868	39	•	•	•			•	•		•	•	•	•	•										
AeroControl-868	40		•	•			•			•	•	•												
Revio-868	41	•	•	•			•			•	•	•												
Revio-868 P	42	•	•	•			•	•		•	•													
Revio-868 SW	43	•	•	•	•		•	•		•	•	•												
Unio-868	44				•	•	•			•	•			•										
Combio-868 JA	45			•			•			•	•													
Combio-868 JA Pulse	45			•			•			•	•													
Combio-868 JA DC	46			•						•														
Combio-868 RM	47	•	•				•			•	•													
Combio-868 HE	48					•	•			•	•													
Combio-868 LI / SW	49				•		•			•	•													
Sensero-868 AC/ AC Plus	50	○	•	•					1		•			•										
Aero-868	51		•						1					•										
Aero-868 Plus	51		•	•					1					•										
Aero-868 AC	51		•	•					1		•			•										
Ventero-868	52		•						1					•										
Protero-868	53		•						1					•										
Lumero-868	54	•	•	•					1					•										
Lumo-868	55	•	○	○					1				○	•										

	Page	Twilight function	Light sensor function	Breakage sensor	Wind sensor input/function	Rain sensor	Multi pre-set languages	Intermediate position & ventilation position	Tilting position/fabric tight	Holiday (intelligent randomiser)	Travel position assignment down	Travel position assignment up	Automatic summer/winter time adjustment	Running time setting	Disable group/master inputs	Disable (Wind) alarm signal	Non erasable memory for automatic date of installation, relay activation counter, motor running time	Storage dimm value	Fixed dimm value	Unidirectional	Bidirectional	Central unit (C)	Group unit (G)	Terminal unit (T)
AeroTec	10	•	•		•	•	•	•	•		•		•	•	•		•					•	•	•
AstroTec	11	•	•				•	•	•	•	•		•	•	•	•	•					•	•	•
TempoTec	12						•	•	•	•	•		•				•							•
MemoTec	13							•	•															•
VarioTec	14							•	•							•						•	•	•
MonoTec	15																					•		
AeroControl	16		•		•			•	•															•
TimeTec	17																							•
Lumo	20	•	•																					
Lumero	20	•	•																					
Aero	21		•		•																			
Ventero	22				•																			
Aquero	23					•																		
Centero	26						•	•	•		•	•	•								•	•	•	•
TempoTel 2 *	28						•	•	•	•	•	•	•							•	•	•	•	•
MultiTel 2	29						•	•	•												•	•	•	•
VarioTel 2	30																			•	•	•	•	•
LumeroTel 2	31																			•	•	•	•	•
MonoTel 2	32																			•	•	•	•	•
SoloTel 2	33																			•	•	•	•	•
MultiTec Touch-868	34						•	•	•	•	•	•	•								•	•	•	•
AstroTec-868	35	•	•				•	•	•	•	•		•	•			○			•		•	•	•
AstroTec-868 bidi	35	•	•				•	•	•	•	•		•	•			○				•	•	•	•
MemoTec-868	36																			•		•	•	•
UniTec-868	37																			•	•	•	•	•
Invio-868	38																			•				
VarioTec-868	39							•	•							•				•	•	•	•	•
AeroControl-868	40	•	•		•			•	•											•				•
Revio-868	41							•	•											•	•			
Revio-868 P	42							•	•											•	•			
Revio-868 SW	43							•	•											•	•			
Unio-868	44																			•	•			
Combio-868 JA	45							•	•											•	•			
Combio-868 JA Pulse	45							•	•											•	•			
Combio-868 JA DC	46							•	•											•				
Combio-868 RM	47							•	•											•	•			
Combio-868 HE	48																		•	•	•			
Combio-868 LI / SW	49																	LI		•				
Sensero-868 AC/AC Plus	50	•	•		•	•														•	•			
Aero-868	51		•		•															•	•			
Aero-868 Plus	51		•		•															•	•			
Aero-868 AC	51		•		•																			
Ventero-868	52				•															•	•			
Protero-868	53				•															•	•			
Lumero-868	54		•																	•	•			
Lumo-868	55	•	•	•																•	•			

○ With restrictions/Partially suitable • Yes/Suitable [1] Up to 150 channels * Times of 2 Groups + Central ° Incl. routing

HARDWIRED CONTROL UNITS

Hardwired controllers, Project control units, Sensors

AeroTec

The control unit for sun protection systems

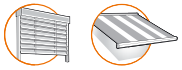

The perfect weather station for each sun protection system

- Factory preset (date, time, operating time)
- Language options (15 languages)
- Connectable:
  – Light sensor
  – Wind sensor
  – Rain sensor
- External inputs
- Suitable as a master (C), group (G) or terminal unit (T)
- Intermediate position
- Additional switching time
- Tilting position or canopy tension
- Manual / automatic switching (selectable)
- Suitable for all current switch programmes

Technical data and dimensions			
Operating Voltage (V)	1 ~ 230 – 240		
Frequency (Hz)	50 – 60		
Maximum switching current (A)	5 (250 V AC at cos φ =1)		
Battery type	1 × CR 2032		
Ingress protection (IP)	20		
Protection class (only after correct installation)	II		
Temperature range (°C)	0 to +55		
Type of installation	Flush mount in Ø 58 mm wallbox, surface mount in suitable casing posssible		
ProLine frame included	–	–	• (set)
Colours	white	ivory	white
Item Number	**28 141.0001**	**28 141.0011**	**28 140.0001**

AstroTec

The convenient timer

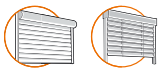

Timer with astro program

- Factory preset (date, time, operating time)
- Language options (15 languages)
- Astro programme, adjustable worldwide
- Automatic summer/winter time changeover
- Holiday programme
- Connectable light sensor (sun/twilight function)
- External input
- Suitable as a master (C), group (G) or terminal unit (T)
- Intermediate positions
- Ventilation or tilting position
- Manual/automatic switching (selectable)
- Suitable for all current switch programmes

Technical data and dimensions			
Operating Voltage (V)	1 ~ 230 – 240		
Frequency (Hz)	50 – 60		
Maximum switching current (A)	5 (250 V AC at cos φ =1)		
Battery type	1 × CR 2032		
Ingress protection (IP)	20		
Protection class (only after correct installation)	II		
Temperature range (°C)	0 to +55		
Type of installation	Flush mount in Ø 58 mm wallbox, surface mount in suitable casing posssible		
ProLine frame included	–	–	• (set)
Colours	white	ivory	white
Item Number	**28 061.0001**	**28 061.0011**	**28 060.0001**
AstroClic Comfortable timer UniClic frame	**28 881.0001**		
AstroTec operating unit white (for UniClic frame)	**28 061.2001**		
UniClic-frame white (with integrated mains unit)	**28 880.0001**		

TempoTec

The simple timer

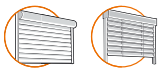

Simple timer with fixed switching times and astro program

- Factory preset (date, time, operating time)
- Language options (15 languages)
- Astro evening programme, adjustable worldwide
- Automatic summer / winter time changeover
- Holiday programme
- Intermediate positions
- Ventilation or tilting position
- Manual/automatic switching (selectable)
- Suitable for all current switch programmes

Technical data and dimensions			
Operating Voltage (V)	1 ~ 230 – 240		
Frequency (Hz)	50 – 60		
Maximum switching current (A)	5 (250 V AC at cos φ =1)		
Output	2 × normally open contact		
Battery type	1 × CR 2032		
Ingress protection (IP)	20		
Protection class (only after correct installation)	II		
Temperature range (°C)	0 to +55		
Type of installation	Flush mount in Ø 58 mm wallbox, surface mount in suitable casing posssible		
ProLine frame included	–	–	• (set)
Colours	white	ivory	white
Item Number	**28 041.0001**	**28 041.0011**	**28 040.0001**
TempoTec operating unit white (for UniClic frame)	**28 041.2001**		
UniClic-frame white (with integrated mains unit)	**28 880.0001**		

MemoTec

The intelligent switch

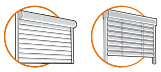

Suitable for large range of switch programmes.

- 24-hour command repetition (daily)
- 7-day command repetition (weekly)
- Intermediate positions
- Ventilation or tilting position
- Manual/automatic switching (selectable)
- Suitable for all current switch programmes

Technical data and dimensions			
Operating Voltage (V)	1 ~ 230 – 240		
Frequency (Hz)	50 – 60		
Maximum switching current (A)	5 (250 V AC at cos φ =1)		
Output	2 × normally open contact		
Ingress protection (IP)	20		
Protection class (only after correct installation)	II		
Temperature range (°C)	0 to +55		
Type of installation	Flush mount in Ø 58 mm wallbox, surface mount in suitable casing posssible		
ProLine frame included	–	–	• (set)
Colours	white	ivory	white
Item Number	**28 021.0001**	**28 021.0011**	**28 020.0001**
MemoTec operating unit white (for UniClic frame)	**28 021.2001**		
UniClic-frame white (with integrated mains unit)	**28 880.0001**		

VarioTec

The variable control unit

Control unit for the assembly of comfort controls

- Installation flexibility (roller shutter, awning, venetian blind)
- Control unit for the assembly of comfort controls
- External input
- Suitable for use as a master (C), group (G) or terminal unit (T)
- Central input, can be switched off via sliding switch
- Intermediate positions
- Ventilation or tilting position
- Suitable for all current switch programmes

Technical data and dimensions			
Operating Voltage (V)	1 ~ 230 – 240		
Frequency (Hz)	50 – 60		
Maximum switching current (A)	5 (250 V AC at cos φ =1)		
Output	2 × potential free normally open contact		
Input	Central and individual input		
Ingress protection (IP)	20		
Protection class (only after correct installation)	II		
Temperature range (°C)	0 to +55		
Type of installation	Flush mount in Ø 58 mm wallbox, surface mount in suitable casing posssible		
ProLine frame included	–	–	• (set)
Colours	white	ivory	white
Item Number	**28 121.0001**	**28 121.0011**	**28 120.0001**
VarioTec operating unit white (for UniClic frame)	**28 121.2001**		
UniClic-frame white (with integrated mains unit)	**28 880.0001**		

MonoTec

The intelligent switch

Comfort control switch

- Central switch
- Group switch
- Suitable for all current switch programmes
- Must not be used for connecting a motor directly!
- Suitable for roller shutters, venetian blinds and awnings

Technical data and dimensions

IMPORTANT	**Must not be used for connecting a motor directly!**		
Output	2 × Group und 1 × Central		
Ingress protection (IP)	20		
Protection class (only after correct installation)	II		
Temperature range (°C)	0 to +55		
Type of installation	Flush mount in Ø 58 mm wallbox, surface mount in suitable casing posssible		
ProLine frame included	–	–	• (set)
Colours	white	ivory	white
Item Number	**28 101.0001**	**28 101.0011**	**28 100.0001**

AeroControl

The control unit for sun protection systems

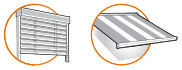

Surface mount control unit for sun protections systems (Awnings / Venetian blinds)

- Connection options: Aero, Ventero, Lumero, mains lead, 1 alternating current drive, momentary contact switch
- Robust and simple construction for problem-free retrofitting
- Fast installation
- Compatible with ProLine control units

Technical data and dimensions	
Operating Voltage (V)	1 ~ 230
Frequency (Hz)	50 – 60
Maximum switching current (A)	5
Ingress protection (IP)	55
Dimensions (mm)	L 108 × W 108 × H 58
Temperature range (°C)	–25 to +55
Operating time (Min.)	2
Item Number	**28 370.0101**

TimeTec

Day and week time switch

Electronic roller shutter control

- Single control unit
- Weekly time switch
- Automatic, manual and random mode
- Memory places 7 × up / 7 × down
- No adapter frames available

Technical data and dimensions	
Operating Voltage (V)	1 ~ 230, ±10%
Frequency (Hz)	50
Maximum switching current (A)	5 (at cos φ = 1)
Output	2 Relais normally open contact (not potential-free)
Temperature range (°C)	−5 to +45
Type of installation	Flush mount Ø 58 mm
Umschaltverzögerung (s)	mind. 0.5
Standby (h)	ca. 24 (by 20 °C)
Operating time (s)	150
Colours	ivory
Item Number	**28 670.0001**

Objecta

ProLine comfort control

Control center for large-scale objects

- Modular concept
- Suitable for large projects
- Sensor data analysing via 4 integrated AeroTec operating devices
- Every facade/floor can be controlled individually
- All sun protection systems can be controlled individually
- Master control unit for 4 facades
- Individual light and wind detection per sub-group
- Sensor system can be connected (wind, sun, rain, frost etc.)
- Expandable up to 64 sub-groups per channel/facade
- Compatible with ProLine control units

Technical data and dimensions	
Operating Voltage (V)	1 ~ 230
Frequency (Hz)	50
Maximum switching current (A)	4 × max. 5 (potential free)
Power consumption (VA)	max. 10
Ingress protection (IP)	54
Dimensions (mm)	H 230 × W 300 × T 90
Temperature range (°C)	0 to +55
Power supply for external devices	24 V DC max. 150 mA
Incl. operating units	–
Item Number	**28 700.0001**
AeroTec operating unit white	**28 141.2001**
AstroTec operating unit white	**28 061.2001**
VarioTec operating unit white	**28 121.2001**

Central control units

Special Controls

Central control units to switch alternating current motors

- Operation of multiple drives with one control unit using an interlocked venetian blinds push button or switch
- Automatic switching with ProLine control units and individual operation with interlocked venetian blinds push button
- Follow the overall phase load when designing the complete system. The number of sequencing relays that can be connected in series depends on the current consumption of the motors employed.
- The back-up fuse may not exceed a maximum value of 10 A.

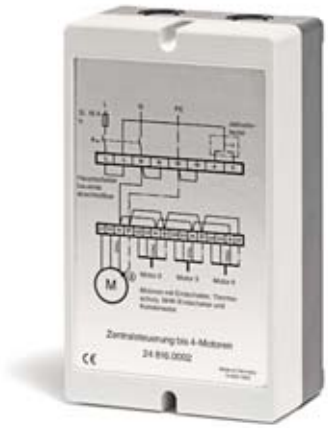

2-way motor control unit, 4-way motor control unit
and central control unit for 1 single-phase motor without permanent phase

Technical data and dimensions	Central control unit (sequencing relay) for 1 or 2 single-phase motors	Central control unit for up to 4 single-phase motors without individual control	Central control unit for 1 single-phase motor without permanent phase
Operating Voltage (V)	1 ~ 230 – 240		
Frequency (Hz)	50 – 60		
Current consumption (mA)	10 in relay mode	–	10 in relay mode
Ingress protection (IP)	20		
Switching current	max. 2 × 3 A, 250 VAC, motor load max. 2 × 690 VA, for 230 V-motors only with limit switches	max. 4 × 3 A, 250 VAC	8 A AC1, 4 A cos phi 0.6
Dimensions (mm)	L 47 × W 52 × H 21	L 115 × W 65 × H 190	L 49 × W 53 × H 22
Temperature range (°C)	0 to +60	–10 to +40	
Fuse protection (A)	max. 10	10 slow-blow	
Max. number of drives	2	4	1
Item Number	**23 994.0002**	**24 816.0002**	**23 995.0201**

Lumo / Lumero

The light and twilight sensor

Lumo – Protects plants and furniture against sun exposure

- Suitable for use as light and twilight sensor for roller shutters
- Easy to attach
- Polarity protection
- Wire length can be shortened
- Only for use in combination with AstroTec or AstroTec-868

Lumero – Sensor for fitting outside

Roller shutter, venetian blind, awning, blind

- Suitable for use as light and twilight sensor
- Easy to attach with angular fixing
- Polarity protection (with AstroTec and AstroTec-868)
- Only for use in combination with AstroTec, AstroTec-868 or AeroTec

Technical data and dimensions	Lumo		Lumero
Ingress protection (IP)	20		43 (Suitable for fitting outside because of installation position)
Dimensions (mm)	Ø 46 × 22		L 82 × W 27 × H 38
Temperature range (°C)	0 to +55		−25 to +65
Cable length (m)	2	10	
Item Number	**28 080.0001**	**28 090.0001**	**28 180.0001**

Aero

The light and wind sensor

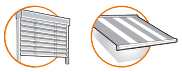

Comfortable living inside and outside

- Light and wind sensor
- Different mounting options
- Only for use in combination with AeroTec
- Continuous measurement of wind and light values

Technical data and dimensions	
Pole support (mm)	Ø 60 – 80 (optional accessory)
Detection angle (°)	150
Wind sensor	•
Light sensor	•
Ingress protection (IP)	43 (Suitable for fitting outside because of installation position)
Dimensions (mm)	L 280 × W 130 × H 130
Temperature range (°C)	–25 to +60
Colours	white
Item Number	**28 160.0001**
Pole and corner adapter (Ø 60 – 80 mm)	**24 269.0202**

Ventero

The wind sensor

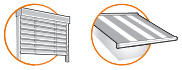

To protect the sun protection system

- Wind sensor
- Different mounting options
- Only for use in combination with AeroTec
- Continuous measurement of wind values

Technical data and dimensions	
Pole support (mm)	Ø 60 – 80 (optional accessory)
Detection angle (°)	150
Wind sensor	•
Light sensor	–
Ingress protection (IP)	43 (Suitable for fitting outside because of installation position)
Dimensions (mm)	L 280 × W 130 × H 130
Temperature range (°C)	–25 to +60
Colours	white
Item Number	**28 170.0001**
Pole and corner adapter (Ø 60 – 80 mm)	**24 269.0202**

Aquero

The rain sensor for sun protection systems

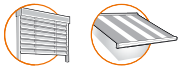

Our elegant sensor with claim

- Rain sensor
- With integrated power supply unit
- Precipitation measuring at intervals via the sensor surfaces
- Response threshold preset
- Potential-free changeover contact

Technical data and dimensions	
Operating Voltage (V)	1 ~ 110 – 230
Frequency (Hz)	50 – 60
Power consumption (W)	0.5 – 5
Output	1 potential-free changeover contact 5 A/250 V
Ingress protection (IP)	44
Dimensions (mm)	L 300 × W 170 × H 65
Temperature range (°C)	–20 to +50
Item Number	**28 690.0001**

WIRELESS HOME AUTOMATION

Centero, hand-held radio transmitter, wall-mounted transmitter, radio receivers and radio sensors

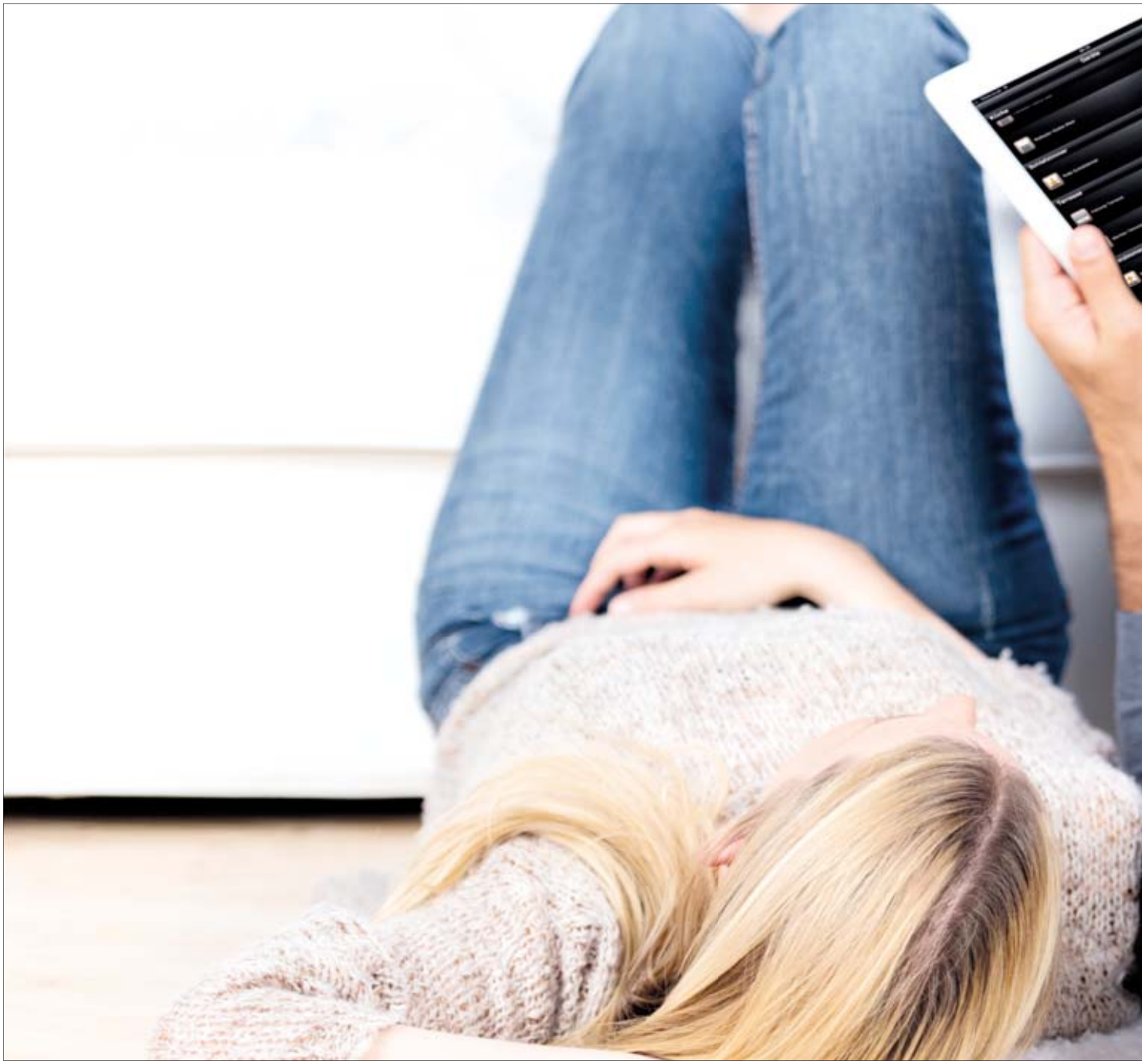

Centero

Centralized building automation from elero

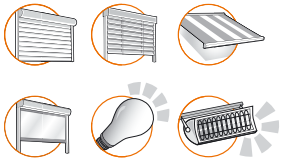

Simple and intuitive operation of building technologies

- Access the building technology worldwide
- Security thanks to reliable feedback
- Use also possible without an Internet connection
- Swift and simple installation
- Encrypted data transfer
- Free Centero app for iOS®, Android™ and Windows®
- Various users can access the Centero at the same time
- Taught-in devices automatically appear in the app, may be renamed, grouped or assigned icons
- Even more living comfort thanks to individual scene modes and automatic controls
- The set includes a transmitter stick with 15 channels. up to 10 transmitter sticks can be operated on one Centero server for extension purposes
- Extendable with products from ELDAT

Centero Server, Centero Transmitter Stick

Technical data and dimensions	Centero Server	Centero Transmitter Stick
Operating Voltage (V)	100 – 240	n. a.
Frequency (Hz)	50 – 60	n. a.
Power consumption (W)	5 (20 max.)	n. a.
Transmission power (mW)	n. a.	10
Ingress protection (IP)	20	
Dimensions (mm)	L 95 × W 65 × H 49	n. a.
Temperature range (°C)	0 to +55	
Radio frequency (MHz)	868	
Number of channels	n. a.	15
Unidirectional	–	
Bidirectional	•	
Interface	USB 2.0, LAN, WLAN	USB 2.0
There are different regulations for the USA, Canada, Australia and some countries in South America	915	
Accessories included	Centero Server, Centero Transmitter Stick, Adapter, Cable, Manual	
Item Number	**28 795.0001**	
Centero Transmitter Stick		**22 125.0001**
Centero Power Pack	**28 899.0001**	

Peripheral devices for the Centero

from the company Eldat

USB-Stick Easywave RX09
Bidirectional radio module with 64 channels for building control and monitoring via Easywave receiver.

Window contact RTS16
Status monitoring for windows, doors and gates.

Motion detector RTS40
Battery-operated radio motion detector for the indoor area. Automatic reaction in accordance with preferred settings.

Humidity sensor SH01
Humidity sensor and push button. Cyclical measurement of the relative humidity with switching signal to an Easywave radio receiver.

Technical data and dimensions	USB-Stick Easywave RX09	Window contact RTS16	Motion detector RTS40	Humidity sensor SH01
Frequency (MHz)	868,30			
Modulation	FSK			
Coding	Easywave	Easywave A/B	Easywave A/B / Easywave Plus	Easywave A/B
Power supply	via USB port	1 × 3 V battery, CR2032	2 × 3 V batteries, CR2032	1 × 3 V battery, CR2032 or alternatively 12 – 24 V AC/DC ELV to DIN VDE 0100-410
Output channels	64	–	–	–
Current consumption (µA)	–	1,6	–	max. 15
Measuring range	–	–	–	1 – 99 % rF
Accuracy	–	–	–	± 5 % (at 30 % – 70 % rF)
Switching values	–	–	–	1. > 74% rF 2. fast increase by 4% when > 40 % rF
Data logging	–	–	–	every 2 mins.
Operating temperature (°C)	0° to + 40°	– 20° to + 60°		
Radio range (m)	outdoors: approx. 150 / indoors: approx.30			
Brightness range (lx)	–	–	10 to 500	–
Follow-up time	–	–	1 sec. to 131 mins.	–
Monitoring range (m²)	–	–	approx. 16	–
Ingress protection (IP)	20	54	30	30
Dimensions (mm)	24 × 8 × 75	Transmitter: 65 × 12 × 28 Magnet: 18 × 18 × 13	Cover: 55 × 55 × 12 Plate: 71 × 71 × 1.5	Cover: 55 × 55 × 10 Plate: 71 × 71 × 1.5
Weight (g)	13	Transmitter: 20.6 / Magnet: 2.2	34.0	32.0 inkl. Batterie
Scope of supply	USB transceiver, operating manual	Radio-controlled window contact RTS16 incl. battery, bracket with magnet, mounting accessories, operating manual	Transmission module, 2 batteries CR2032, cover, mounting plate, mounting accessories, operating manual	Sensor module, battery CR2032, mounting plate, push button, mounting accessories, operating manual
Item Number	**28 895.0301**	**28 895.0101**	**28 895.0001**	**28 895.0201**

TempoTel 2

The radio hand-held transmitter with integrated timer

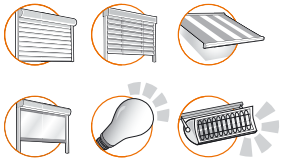

Hand-held transmitter for maximum user comfort

- 10 channel radio hand-held transmitter
- 10 individual channels, 2 group channels and 1 one master channel
- Status-LED-Display
- Different colours: white, silver, titanium grey
- Select-button for manual/automatic switch with LED-Display and clear text on the display
- Programming Push-button on the back
- Various languages for selection with illuminated display
- Convenient control and selection of channels per joystick
- Astro programme adjustable worldwide
- Automatic summer/winter time changeover
- Holiday programme
- Takes standard batteries
- For unidirectional and bidirectional radio systems
- Transmission-secure radio frequency 868 MHz

Technical data and dimensions			
Operating Voltage (V DC)	3		
Battery type	2 × LR06 (AA Mignon)		
Ingress protection (IP)	20		
Temperature range (°C)	0 to +50		
Radio frequency (MHz)	868		
Dimensions (mm) hand-held transmitter	L 150 × W 51 × H 26		
Weight (g) including batteries	140		
Individual channels	10		
Group channels	2		
Master channel	1		
Manual/automatic switch	•		
Unidirectional	•		
Bidirectional	•		
There are different regulations for the USA, Canada, Australia and some countries in South America	915		
Accessories included	Magnetic wall bracket, batteries and mounting material (packed ready to mount in display package)		
Colours	white	silver	titanium grey
Item Number	**28 265.0002**	**28 266.0002**	**28 267.0002**

MultiTel 2

The convenient 15 channel radio hand-held transmitter

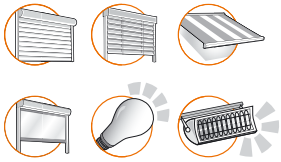

MultiTel 2 – the Comfortable

- 15 channel radio hand-held transmitter
- 15 individual channels, 5 group channels and 1 master channel
- Status-LED-Display
- Different colours: white, silver, titanium grey
- Select-button for manual/automatic switch with LED-Display and symbols on the display
- Programming Push-button on the back
- Various languages for selection with illuminated display
- Convenient control and selection of channels per joystick
- Takes standard batteries
- No downwards compatibility with unidirectional radio products by elero
- Transmission-secure radio frequency 868 MHz

Technical data and dimensions			
Operating Voltage (V DC)	3		
Battery type	2 × LR06 (AA Mignon)		
Ingress protection (IP)	20		
Temperature range (°C)	0 to +50		
Radio frequency (MHz)	868		
Dimensions (mm) Handsender	L 150 × W 51 × H 26		
Weight (g) including batteries	140		
Individual channels	15		
Group channels	5 (each max. 5 individual channels)		
Master channel	1		
Manual/automatic switch	•		
Unidirectional	–		
Bidirectional	•		
There are different regulations for the USA, Canada, Australia and some countries in South America	915		
Accessories included	Magnetic wall bracket, batteries and mounting material (packed ready to mount in display package)		
Colours	white	silver	titanium grey
Item Number	**28 255.0001**	**28 256.0001**	**28 257.0001**

VarioTel 2

The 5 + 1 channel radio hand-held transmitter

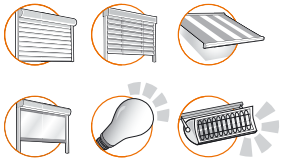

The Versatile

- 5 + 1 channel radio hand-held transmitter
- 5 individual channels, 1 master channel
- Status-LED-Display
- Different colours: white, silver, titanium grey
- Select-button for manual/automatic/command switch with LED-Display
- Programming Push-button on the back
- Display of command via 5 LEDs
- Sticker for individual labeling on the back
- Takes standard batteries
- For unidirectional and bidirectional radio systems
- Übertragungssichere Radio frequency 868 MHz

Technical data and dimensions			
Operating Voltage (V DC)	3		
Battery type	2 × LR06 (AA Mignon)		
Ingress protection (IP)	20		
Temperature range (°C)	0 to +50		
Radio frequency (MHz)	868		
Dimensions (mm) hand-held transmitter	L 120 × W 51 × H 26		
Weight (g) including batteries	120		
Individual channels	5		
Group channels	–		
Master channel	1		
Manual/automatic switch	•		
Unidirectional	•		
Bidirectional	•		
There are different regulations for the USA, Canada, Australia and some countries in South America	915		
Accessories included	Magnetic wall bracket, batteries and mounting material (packed ready to mount in display package)		
Colours	white	silver	titanium grey
Item Number	**28 245.0001**	**28 246.0001**	**28 247.0001**

LumeroTel 2

The radio hand-held transmitter for sun protection systems

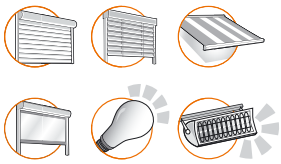

LumeroTel 2 – the Comfortable

- 1 channel radio hand-held transmitter
- Large up-stop-down Push-buttons
- Status-LED-Display
- Different colours: white, silver, titanium grey
- Single-, group- or central unit
- Select-button for manual/automatic switch with LED-Display
- Programming Push-button on the back
- Takes standard batteries
- For unidirectional and bidirectional radio systems
- Transmission-secure radio frequency 868 MHz

Technical data and dimensions			
Operating Voltage (V DC)	3		
Battery type	2 × LR06 (AA Mignon)		
Ingress protection (IP)	20		
Temperature range (°C)	0 to +50		
Radio frequency (MHz)	868		
Dimensions (mm) hand-held transmitter	L 150 × W 51 × H 26		
Weight (g) including batteries	140		
Channels	1		
Manual/automatic switch	•		
Unidirectional	•		
Bidirectional	•		
T here are different regulations for the USA, Canada, Australia and some countries in South America	915		
Accessories included	Magnetic wall bracket, batteries and mounting material (packed ready to mount in display package)		
Colours	white	silver	titanium grey
Item Number	**28 225.0001**	**28 226.0001**	**28 227.0001**

MonoTel 2

The simple hand-held transmitter

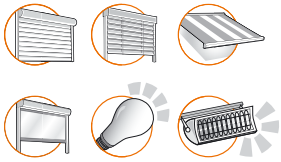

The radio hand-held transmitter for triggering one or several receivers

- 1 channel radio hand-held transmitter
- Large up-stop-down Push-buttons
- Status-LED-Display
- Different colours: white, silver, titanium grey
- Single-, group- or central unit
- Takes standard batteries
- Programming Push-button on the back
- For unidirectional and bidirectional radio systems
- Transmission-secure radio frequency 868 MHz

Technical data and dimensions			
Operating Voltage (V DC)	3		
Battery type	2 × LR06 (AA Mignon)		
Ingress protection (IP)	20		
Temperature range (°C)	0 to +50		
Radio frequency (MHz)	868		
Dimensions (mm) hand-held transmitter	L 120 × W 51 × H 26		
Weight (g) including batteries	120		
Channels	1		
Manual/automatic switch	–		
Unidirectional	•		
Bidirectional	•		
There are different regulations for the USA, Canada, Australia and some countries in South America	915		
Accessories included	Magnetic wall bracket, batteries and mounting material (packed ready to mount in display package)		
Colours	white	silver	titanium grey
Item Number	**28 205.0001**	**28 206.0001**	**28 207.0001**

SoloTel 2

The elegant wall-mounted / hand-held transmitter

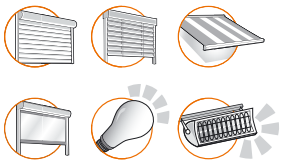

The Combined hand-held transmitter

- 1 channel hand-held transmitter
- Large up-stop-down Push-buttons
- Easy to attach with wall mounting
- Elegant design
- Takes standard button cell battery
- Different colours: white, black, silver
- For unidirectional and bidirectional radio systems
- Transmission-secure radio frequency 868 MHz

Technical data and dimensions			
Operating Voltage (V DC)	3		
Battery type	1 × CR 2032		
Ingress protection (IP)	20		
Temperature range (°C)	0 to +50		
Radio frequency (MHz)	868		
Dimensions (mm) hand-held transmitter	L 85 × W 85 × H 18		
Weight (g) including batteries	45		
Channels	1		
Manual/automatic switch	–		
Unidirectional	•		
Bidirectional	•		
There are different regulations for the USA, Canada, Australia and some countries in South America	915		
Accessories included	Magnetic wall bracket, batteries and mounting material (packed ready to mount in display package		
Colours	white	silver	black
Item Number	**28 600.0006**	**28 640.0006**	**28 620.0006**

MultiTec Touch-868

The multi-talent for operating your building technology

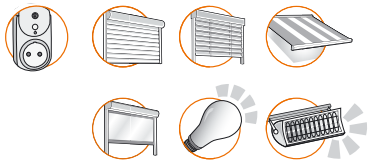

Multi-channel radio wall transmitter

- 20 individual channels, 5 groups and 1 master channel
- Individual switching times and holiday program
- Astro function individually settable for each channel
- Automatic summer / winter time changeover
- Illuminated display – menu guidance in 14 different languages
- Battery for temporary storage of times during blackout
- Simple to integrate into existing ProLine 2 radio systems

Technical data and dimensions			
Power supply (V)	230 (Flush mount wallbox)		
Power supply via Mini-USB (socket)	5 V AC, max. 0.5 A		
Power supply / standby (W)	0.5 (typical)		
Battery type	CR 2032		
Ingress protection (IP)	20		
Temperature range (°C)	0 to +45		
Radio frequency (MHz)	868		
Dimensions (mm)	W 145 × H 90		
Weight (g) including batteries	200		
Unidirectional	–		
Bidirectional	•		
Accessories included	Mains unit with wall holder, operating instructions, mounting bag with 2 screws and dowels		
Colours	ivory	silver	titanium grey
Item Number	**28 715.0001**	**28 716.0001**	**28 717.0001**

AstroTec-868 / AstroTec-868 bidi

The convenient wall-mounted transmitter

Comfortable 1-channel-timer with astro program

- Factory preset (date, time, operating time)
- Language options (15 languages)
- Astro programme, adjustable worldwide
- Automatic summer/winter time changeover
- Holiday programme
- Connectable light sensor (sun/twilight function)
- Intermediate position
- Ventilation or tilting position
- Manual/automatic switching (selectable)
- LED for transmission control
- Takes standard batteries
- Easy to attach with wall holder
- Bidi-version: No downwards compatibility with unidirectional radio products by elero

Note: The AstroTec-868 bidi is a radio wall transmitter for exclusive use with bidirectional receivers (use of the AstroTec-868 bidi with unidirectional transmitters and receivers is not possible – in this use please use the unidirectional AstroTec-868 (item no. 28 320.0001).

Technical data and dimensions	AstroTec-868	AstroTec-868 bidi
Operating Voltage (V DC)	3	
Battery type	2 × LR 03 (AAA)	
Ingress protection (IP)	20	
Temperature range (°C)	0 to +55	
Radio frequency (MHz)	868	
Dimensions (mm)	L 85 × W 85 × T 28	
Type of installation	Wall-mounted	
Unidirectional	•	–
Bidirectional	–	•
There are different regulations for the USA, Canada, Australia and some countries in South America	915	
Accessories included	Batteries, wall bracket, 2 wall plugs (Ø 6 mm), 2 screws (Spax 4 × 35)	
Colours	white	
Item Number	**28 320.0001**	**28 320.0006**

MemoTec-868

The intelligent wall-mounted transmitter

Intelligent comfort transmitter with daily or weekly switching time

- Fixed daily or weekly switching times programmable
- Intermediate positions
- Ventilation or tilting position
- Manual/automatic switch
- LED for transmission control
- Takes standard batteries
- Unidirectional only
- Easy to attach with wall holder
- Transmission-secure radio frequency 868 MHz

Technical data and dimensions	
Operating Voltage (V DC)	3
Battery type	2 × LR 03 (AAA)
Ingress protection (IP)	20
Temperature range (°C)	0 to +55
Radio frequency (MHz)	868
Dimensions (mm)	L 85 × B 85 × T 28
Type of installation	Wall-mounted
Unidirectional	•
Bidirectional	–
There are different regulations for the USA, Canada, Australia and some countries in South America	915
Accessories included	Batteries, Wall bracket, 2 wall plugs (Ø 6 mm), 2 screws (Spax 4 × 36)
Colours	white
Item Number	**28 300.0001**

UniTec-868 / UniClic-868

1 channel wall sender

Wall transmitter with manual / automatic switching

- 1 channel wall sender
- Large UP-STOP-DOWN Push-buttons
- Ventilation and tilting position
- Easy to attach with wall mounting
- LED for transmission control
- Takes standard button cell battery
- Suitable for all current switch programmes (with adapter frame)
- Select-button for manual/automatic switch
- For unidirectional and bidirectional radio systems

UniTec-868, UniClic-868

Technical data and dimensions	UniTec-868	UniClic-868
Operating Voltage (V DC)	3	
Battery type	CR 2032	
Ingress protection (IP)	20	
Temperature range (°C)	0 to +50	
Radio frequency (MHz)	868	
Dimensions (mm)	L 54 × W 54 × T 22 (without frame) L 81 × W 81 × T 22 (with frame)	L 215 × W 64 × T 49 (with frame)
Type of installation	Wall-mounted	Strap coiler box
Channels	1	
Manual/automatic switch	•	
Unidirectional	•	
Bidirectional	•	
There are different regulations for the USA, Canada, Australia and some countries in South America	915	
Accessories included	ProLine frame, battery, wall bracket, 2 wall plugs (Ø 6 mm), 2 screws (4 × 35)	UniClic frame and battery
Colours	white	
Item Number	**28 330.0007**	**28 882.0006**

Invio-868

The flush mount radio transmitter

Flush mount radio transmitter for all elero ProLine radio receivers

- Suitable for the automation of already radio controlled shutters or blinds
- Flexible radio transmitter for all current interlocked Push-buttons
- Solution for all switch programmes
- Detects higher-ranking commands e. g. alarm system
- Fits into deep flush mount box, 60 mm diameter
- Possible to use to interface to a higher-level controller
- Can be combined with switches for blinds from all common lines
- Transmission-secure radio frequency 868 MHz

Technical data and dimensions	
Operating Voltage (V)	1 ~ 230 – 240
Frequency (Hz)	50 – 60
Ingress protection (IP)	20
Temperature range (°C)	0 to +55
Radio frequency (MHz)	868
Dimensions (mm)	L 50 × W 48 × T 22
Type of installation	Flush mount: Requires at least Ø 58 mm flush mount box, 23 mm deep Surface mount: possible in suitable surface mount box
Unidirectional	•
Bidirectional	–
There are different regulations for the USA, Canada, Australia and some countries in South America	915
Item Number	**28 380.0001**

VarioTec-868

The radio receiver for roller shutters and sun protection systems

The All-in-one solution

- Integrated radio receiver
- Suitable for roller shutters, awnings and venetian blinds
- Control unit for the assembly for comfort controls
- External inputs
- Suitable for use as a master (C), group (G) or terminal unit (T)
- Central input, can be switched off via sliding switch
- Intermediate position/ventilation position (VarioTec-868 RM)
- Intermediate position/tilting position (VarioTec-868 JA)
- Suitable for all current switch programmes (with adapter frame)
- Unidirectional only
- Not compatible with the Sensero-868

Technical data and dimensions	VarioTec-868	
Operating Voltage (V)	1 ~ 230 – 240	
Frequency (Hz)	50 – 60	
Maximum switching current (A)	5 (resistive load)	
Output	2 × potential free normally open contact	
Input	Central and individual input	
Ingress protection (IP)	20	
Protection class (only after correct installation)	II	
Temperature range (°C)	0 to +55	
Radio frequency (MHz)	868	
Unidirectional	•	
Bidirectional	•	
Type of installation	Flush mount: requires at least Ø 58 mm flush mount box, 35 mm deep Surface mount: possible in suitable surface mount box Strap coiler box: use UniClic version	
ProLine frame included	–	•
Colours	white	set white
Item Number	**28 341.0006**	**28 340.0006**

AeroControl-868

Control unit for awnings and venetian blinds

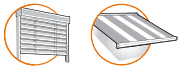

Surface mount control unit for sun protections systems, with integrated radio receiver

- Surface mount control unit for sun protections systems (Awning / Venetian blind)
- Robust and simple construction for problem-free retrofitting
- Fast installation
- Integrated radio receiver
- Operation is through a optionally connected push button or a hand-held transmitter
- Compatible with ProLine control units
- Transmission-secure radio frequency 868 MHz
- Connection options: Aero, Ventero, Lumero, mains lead, 1 alternating current drive, momentary contact switch

Technical data and dimensions	
Operating Voltage (V)	1 ~ 230
Frequency (Hz)	50 – 60
Maximum switching current (A)	5 (250 V AC at cos φ =1)
Ingress protection (IP)	55
Dimensions (mm)	L 108 × W 108 × H 58
Temperature range (°C)	–25 to +55
Radio frequency (MHz)	868
Unidirectional	•
Bidirectional	–
Operating time (Min.)	2
Item Number	**28 370.0001**

Revio-868

The built-in receiver for drives

Flush mount receiver for uni- and bidirectional radio control units

- Flexible radio receiver for switches and junction boxes
- Control of single-phase motors
- Fits into deep built-in socket housings, 60 mm diameter
- Different modes (RM, JA, JA-Pulse)
- Additional control possible via external push-button
- May not be operated with sequencing relay
- For unidirectional and bidirectional radio systems

Technical data and dimensions	
Operating Voltage (V)	1 ~ 230 – 240
Frequency (Hz)	50 – 60
Maximum switching current (A)	3
Operating time (Min.)	3 (JA) / 2 (RM)
Ingress protection (IP)	20
Temperature range (°C)	0 to +55
Radio frequency (MHz)	868
Unidirectional	•
Bidirectional	•
Dimensions (mm)	L 50 × W 48 × H 27
Type of installation	Flush mount: Requires at least Ø 58 mm flush mount box, 28 mm deep Exposed: in appropriate exposed casing
Potential-free output	–
Group controller	–
Limit switch detection	•
Item Number	**28 400.0006**

Revio-868 P

The potential-free built-in receiver for drives

Flush mount receiver for uni- and bidirectional radio control units

- Flexible radio receiver for switches and junction boxes
- Fits into deep built-in socket housings, 60 mm diameter
- Suitable for third party controllers
- Outlets potential-free for control with other voltage (e.g. 24 V)
- Suitable for use as a master or terminal unit
- For unidirectional and bidirectional radio systems

Technical data and dimensions	
Operating Voltage (V)	1 ~ 230 – 240
Frequency (Hz)	50 – 60
Maximum switching current (A)	3
Operating time (Min.)	3 (JA) / 2 (RM)
Ingress protection (IP)	20
Temperature range (°C)	0 to +55
Radio frequency (MHz)	868
Unidirectional	•
Bidirectional	•
Dimensions (mm)	L 50 × W 48 × H 27
Type of installation	Flush mount: Requires at least Ø 58 mm flush mount box, 28 mm deep Exposed: in appropriate exposed casing
Potential-free output	•
Group controller	•
Limit switch detection	–
Item Number	**28 410.0006**

Revio-868 SW

Built-in radio receiver for switchable electrical loads

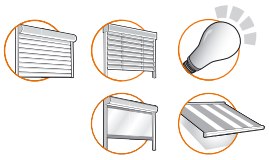

Flush mount receiver for uni- and bidirectional radio control units

- Usable with switchable electrical loads with a 230 V AC supply voltage (e.g. light)
- Venetian blind switch can be connected
- Potential-free output
- For unidirectional and bidirectional radio system

Technical data and dimensions	
Operating Voltage (V)	1 ~ 230 – 240
Frequency (Hz)	50 – 60
Maximum switching current (A)	3
Operating time (Min.)	∞ (SW) / 5 (JA) / 5 (RM)
Ingress protection (IP)	20
Temperature range (°C)	0 to +55
Radio frequency (MHz)	868
Unidirectional	•
Bidirectional	•
Dimensions (mm)	L 50 × W 48 × H 27
Type of installation	Flush mount: Requires at least Ø 58 mm flush mount box, 28 mm deep Exposed: in appropriate exposed casing
Potential-free output	•
Group controller	–
Limit switch detection	–
Item Number	**28 415.0006**

Unio-868

Radio power socket

Convenient operation of electrical appliances by radio command

- Switching on and off via ProLine hand-held transmitter
- Status indication via LED
- Button for manual operation
- Easy to install and to retool
- For unidirectional and bidirectional radio systems with routing function
- Timers and light sensors enable automated control

Technical data and dimensions	
Operating Voltage (V)	1 ~ 230
Switching current (VA)	4.000
Max. connected power (W)	< 0,5 (stand by)
Switching current	16 A / 250 V ~ cos φ ≥ 0,95
Transmission power (mW)	≤ 500
Ingress protection (IP)	20
Dimensions without plug (mm)	L 110 × B 60 × H 40
Temperature range (°C)	0 bis +35
Radio frequency (MHz)	868
Unidirectional	•
Bidirectional	•
Item Number	**28 980.0006**

Combio-868 JA / JA Pulse

The radio receivers for venetian blinds

Radio receivers for venetian blind drives

- External radio receiver for venetian blinds
- Small compact design
- Easy to install and to retool
- Splash protection
- Intermediate position and a tilting position
- For unidirectional and bidirectional radio systems
- Combio-868 JA: Tip operation mode
- Combio-868 JA Pulse: Precise tilting of the slats via pulse mode

Technical data and dimensions	Combio-868 JA	Combio-868 JA Pulse
Operating Voltage (V)	1 ~ 230	
Frequency (Hz)	50	
Max. connected power (W)	450	
Standard pulse duration (ms)	–	87,5
Ingress protection (IP)	56	
Temperature range (°C)	−20 to +70	
Radio frequency (MHz)	868	
Unidirectional	•	
Bidirectional	•	
Dimensions (mm)	L 100 × W 40 × H 15	
Installation space (mm)	L 104 × W 44 × H 19	
Power supply cable (m)	0.5 with Hirschmann plug Stas 3	
Motor side cable (m)	0.25 with Hirschmann coupling Stak3	
Max. number of transmitters	Max. 16	
Item Number	**28 500.0006**	**28 505.0006**

Combio-868 JA DC

The radio receivers for venetian blind DC drives

Unidirectional radio receiver for venetian blind DC drives

- External radio receiver for roller shutter or sun protection systems
- Receiver goes immediately into maintained mode
- Small compact design
- Easy to install and to retool
- Splash protection
- Intermediate position
- For roller shutters it is possible to programme a ventilation position
- For unidirectional and bidirectional radio systems

Technical data and dimensions	Combio-868 JA DC
Operating Voltage (V DC)	12
Ingress protection (IP)	56
Temperature range (°C)	–20 bis +60
Radio frequency (MHz)	868
Unidirectional	•
Bidirectional	–
Dimensions (mm)	L 100 × B 40 × H 15
Installation space (mm)	L 104 × B 44 × H 19
Power supply cable (m)	3
Motor side cable (m)	0,25 m mit Steckverbinder Quikon-Kupplung
Item Number	**28 506.0005**

Combio-868 RM / RevoLine

The radio receivers for tubular drives

Radio receivers for tubular drives

- External radio receiver for roller shutter or sun protection systems
- Receiver goes immediately into maintained mode
- Small compact design
- Easy to install and to retool
- Splash protection
- Intermediate position
- For roller shutters it is possible to programme a ventilation position
- For unidirectional and bidirectional radio systems

Technical data and dimensions	Combio-868 RM (for Type 9–11)	Combio-868 RevoLine	Combio-868 RM/STAK3	Combio-868 RM-K STAS3/STAK3
Operating Voltage (V)	1 ~ 230			
Frequency (Hz)	50			
Max. connected power (W)	450			
Standard pulse duration (ms)	–			
Ingress protection (IP)	56			
Temperature range (°C)	–20 to +70			
Radio frequency (MHz)	868			
Unidirectional	•			
Bidirectional	•			
Dimensions (mm)	L 100 × W 40 × H 15			
Installation space (mm)	L 104 × W 44 × H 19			
Power supply cable (m)	3			0.085 with Hirschmann plug STAS3
Motor side cable (m)	0.25 with NHK motor plug	0.25 with RevoLine motor plug	0.25 with Hirschmann plug Stak3	0.095 with Hirschmann coupl. STAK3
Item Number	**28 520.0006**	**28 525.0006**	**28 580.0006**	**28 585.0006**

Combio-868 HE

The radio receiver for heating systems up to 2 kW

Radio receiver for heating systems

- Switching heating on and off via ProLine hand-held transmitter
- Radiant heaters with rated powers of up to 2.0 kW
- Possibility to switch the radiant heater to 66 % of its rated power
- Small compact design
- Easy to install and to retool
- For unidirectional and bidirectional radio systems

Technical data and dimensions	
Operating Voltage (V)	1 ~ 230
Frequency (Hz)	50
Max. connected power (W)	2,000
Ingress protection (IP)	56 (plug connection IP 54)
Temperature range (°C)	−20 to +45
Radio frequency (MHz)	868
Unidirectional	•
Bidirectional	•
Dimensions (mm)	L 147 × W 48 × H 29
Installation space (mm)	L 151 × W 52 × H 33
Mains cable (m)	0.49 with Hirschmann plug Stas 3
Motor cable (m)	0.235 with Hirschmann coupling Stak3
There are different regulations for the USA, Canada, Australia and some countries in South America	915
Item Number	**28 594.0006**
Connecting cable set for Combio-868 HE (6.5 m connect. cable with plug)	**23 285.0901**

Combio-868 LI/ET LI/MT /SW

The radio receivers for light sources

Radio receiver for light systems

- Dimmer capabilities (Combio-868 LI/ET LI/MT)
- Switching lighting on and off via ProLine hand-held transmitter
- Two brightness levels can be freely programmed
- Combio-868 LI/ET can be changed to switching function SW

Technical data and dimensions	Combio-868 LI/ET	Combio-868 LI/MT	Combio-868 SW
Operating Voltage (V)	1 ~ 230		
Frequency (Hz)	50		
Max. connected power (W)	250		
Ingress protection (IP)	56		
Temperature range (°C)	−20 to +65		
Radio frequency (MHz)	868		
Unidirectional	•		
Bidirectional	–		
Dimensions (mm)	L 100 × W 40 × H 15		
Installation space (mm)	L 104 × W 44 × H 19		
Mains cable (m)	3		
Motor cable (m)	0,9		
There are different regulations for the USA, Canada, Australia and some countries in South America	915		
Item Number	28 563.0005	28 564.0005	28 566.0005

Application table	Lamp voltage (V)	Combio-868 LI/ET	Combio-868 LI/MT	Combio-868 SW
Incandescent lamps	230 V / 50 Hz	•	•	•
Fluorescent lamps, energy-saving lamps	230 V / 50 Hz	–	–	•
Halogen lamps	230 V / 50 Hz	•	•	•
Low voltage lamps with electronic transformer	e.g. 12 V	•	–	•
Low voltage lamps with toroidal or block transformer	e.g. 12 V	–	•	•
Phase control, trailing-edge		•	–	–
Phase control, leading-edge		–	•	–

Sensero-868 AC / -868 AC Plus

The sensor for sun protection systems

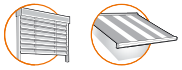

The innovative radio weather sensors

- Sensero-868 AC: Light/twilight and wind sensor, tiltable wallbracket or facade mounting possible
- Sensero-868 AC Plus: With additional rain sensor
- Different adjustable modes
- Transparent housing
- Possibility to adjust desired values
- Manual operation of the system is carried out with a hand-held/wall transmitter
- For unidirectional and bidirectional radio systems

Sensero-868 AC, Sensero-868 AC Plus

Technical data and dimensions	Sensero-868 AC	Sensero-868 AC Plus
Operating Voltage (V)	1 ~ 230	
Frequency (Hz)	50 – 60	
Ingress protection (IP)	44	
Temperature range (°C)	–20 to +60	
Radio frequency (MHz)	868	
Unidirectional	•	
Bidirectional	•	
Dimensions (mm)	L 205 × W 125 × H 105	
Wind-, light sensor	•	
Rain sensor	–	•
Detection angle (°) Light/twilight sensor	150	
There are different regulations for the USA, Canada, Australia and some countries in South America	915	
Item Number	**28 890.0006**	**28 900.0006**

Aero-868 / -868 Plus / AC

The sun and wind sensor

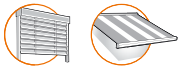

Radio sensors for all situations

- Light and wind sensor for awnings
- Integrated solar cells
- It is not necessary to lay any cables
- Various possibilities for attachment
- Transparent housing
- Quickstart function
- Possibility to adjust set values
- Different adjustable modes
- For unidirectional and bidirectional radio systems
- In combination with radio receivers from the elero ProLine-868 radio system only
- The awning can be operated manually via a manual/wall transmitter
- Transmission-secure radio frequency 868 MHz
- Aero-868: Light- and wind sensor. For venetian blinds
- Aero-868 Plus: Light- and wind sensor For venetian blinds, awnings and blinds
- Aero-868 AC: Wind sensor. For venetian blinds, awnings and blinds with power connection

Aero-868 Plus, Aero-868

Aero-868 is not suitable for applications which require view protection during night time due to the limited power reserves!

Technical data and dimensions	Aero-868 Plus	Aero-868	Aero-868 AC
Power supply	solar		1 ~ 230 V / 50 – 60 Hz
Ingress protection (IP)	43		
Temperature range (°C)	–20 to +60		
Radio frequency (MHz)	868		
Unidirectional	•		
Bidirectional	•		
Dimensions (mm)	L 280 × W 130 × H 130		
Detection angle (°) Light/wind sensor	150		
Standby (h)	~ 24	~ 12	–
There are different regulations for the USA, Canada, Australia and some countries in South America	915		
Item Number	**28 480.0006**	**28 440.0006**	**28 190.0006**
Pole and corner adapter (Ø 60 – 80 mm)	24 269.0202		

Ventero-868

Radio sensor for wind

Wind sensor for venetian blinds

- Wind sensor
- Integrated solar cells
- It is not necessary to lay any cables
- Various possibilities for attachment
- Transparent housing
- Quickstart function
- Possibility to adjust set values
- For unidirectional and bidirectional radio systems

Ventero-868 is not suitable for applications which require view protection during night time due to the limited power reserves!

Technical data and dimensions	
Power supply	solar
Ingress protection (IP)	43
Temperature range (°C)	–20 to +60
Radio frequency (MHz)	868
Unidirectional	•
Bidirectional	•
Dimensions (mm)	L 280 × W 130 × H 130
Detection angle (°) Light/wind sensor	150
Standby (h)	~12
There are different regulations for the USA, Canada, Australia and some countries in South America	915
Item Number	**28 190.0006**
Pole and corner adapter (Ø 60 – 80 mm)	**24 269.0202**

Protero-868

Wireless vibration sensor

Vibration sensor

- Battery-operated, wireless, uni- and bidiretional radio vibration and tilt sensor
- For retractable arm awnings
- Wind sensitivity and angle are adjustable
- Manual operation of the awning with a hand-held/wall transmitter
- May be programmed for the receiver on the same awning only
- Uni- and bidirectional

Technical data and dimensions		
Operating Voltage (V)	3	
Battery type	2 × LR6 (AA)	
Ingress protection (IP)	54	
Temperature range (°C)	−20 to +60	
Radio frequency (MHz)	868	
Unidirectional	•	
Bidirectional	•	
Dimensions (mm)	L 133.3 × W 46.5 × H 26.7	
There are different regulations for the USA, Canada, Australia and some countries in South America	915	
Colours	traffic white	traffic grey
Item Number	**28 960.0006**	**28 961.0006**

Lumero-868

Solar powered, radio operated light sensor for awnings and venetian blinds

Light sensor for your shading system

- Wireless sun sensor
- Integrated solar cells
- It is not necessary to lay any cables
- Transparent housing
- Different adjustable modes
- Manual operation with a hand-held/wall transmitter
- For unidirectional and bidirectional radio systems
- Only in combination with radio receivers from the elero ProLine and ProLine 2 radio system
- Bidi operation only with receivers from Version 75 (Combio-868) or from Version 21 (RolTop-868, SunTop-868) or with min. date 05/2012

Technical data and dimensions	
Power supply	solar
Ingress protection (IP)	54
Temperature range (°C)	–20 to +60
Radio frequency (MHz)	868
Unidirectional	•
Bidirectional	•
Dimensions (mm)	L 149.7 × W 42 × H 28
Detection angle (°)	190
Standby (h)	~1
There are different regulations for the USA, Canada, Australia and some countries in South America	915
Item Number	**28 680.0006**

Lumo-868

The sensor for light, twilight and glass breakage

Radio sensor for light, twilight and glass breakage

- Light and twilight sensor
- Glass breakage function
- Sticks to glass using suction cup
- Manual operation with a hand-held/wall transmitter
- Control according to adjusted threshold values
- Bidi operation only with receivers from Version 75 (Combio-868) or from Version 21 (RolTop-868, SunTop-868) or with min. date 05/2012
- For unidirectional and bidirectional radio systems

Technical data and dimensions	
Operating Voltage (V DC)	3
Battery type	CR 2032
Ingress protection (IP)	20
Temperature range (°C)	0 to +55
Radio frequency (MHz)	868
Unidirectional	•
Bidirectional	•
Dimensions (mm)	Ø 48 × 15
Accessories included	Battery, miniature screw driver for adjusting trigger levels
Item Number	**28 420.0006**

INTELLIGENT ELERO SOLUTIONS

FOR YOUR HOME

Control examples

in building automation

Control examples and their application

In the following pages you will find indicative control examples of our most common requirements in building automation. The circuit examples are shown as circuit diagrams and as wiring diagrams. Thus they can be applied both in your planning and in installation.

Our controls offer a wide variety of different connection types, so we have shown here only an excerpt of the options. Our technical department is at your service for **additional connection examples** or **technical questions.**

Contact T +49 7021 9539-550
E technik@elero.de

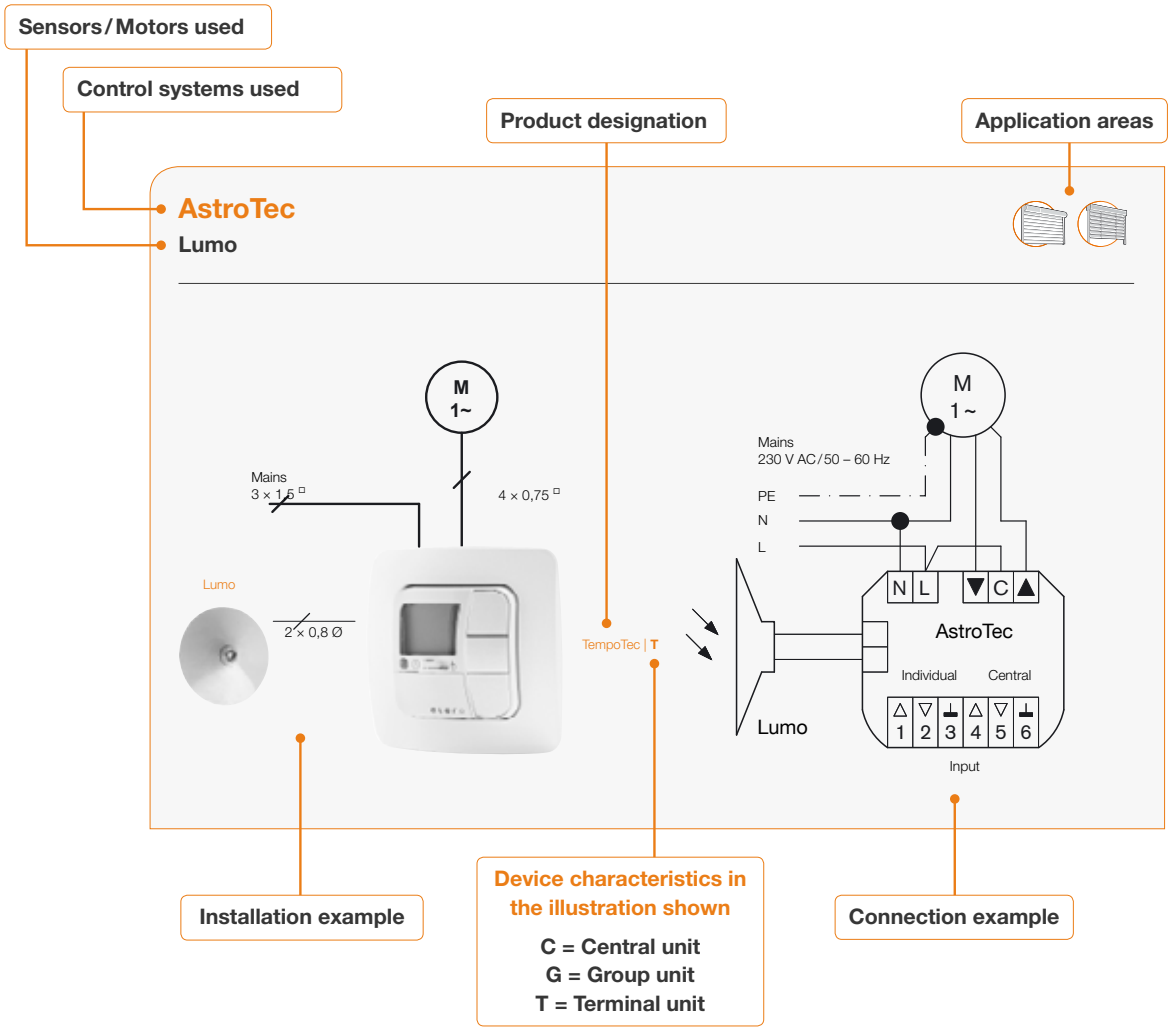

MemoTec

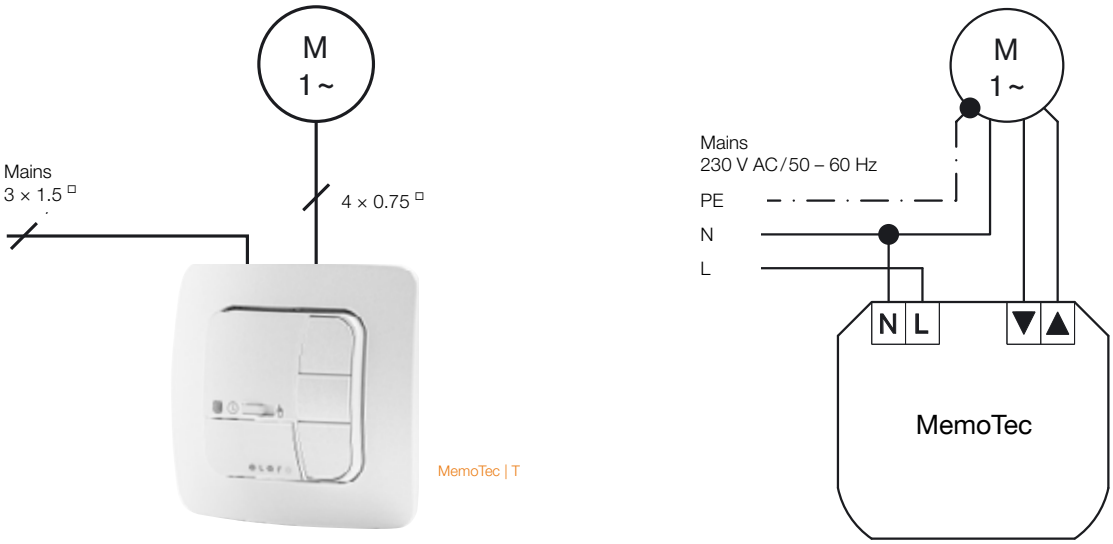

VarioTec

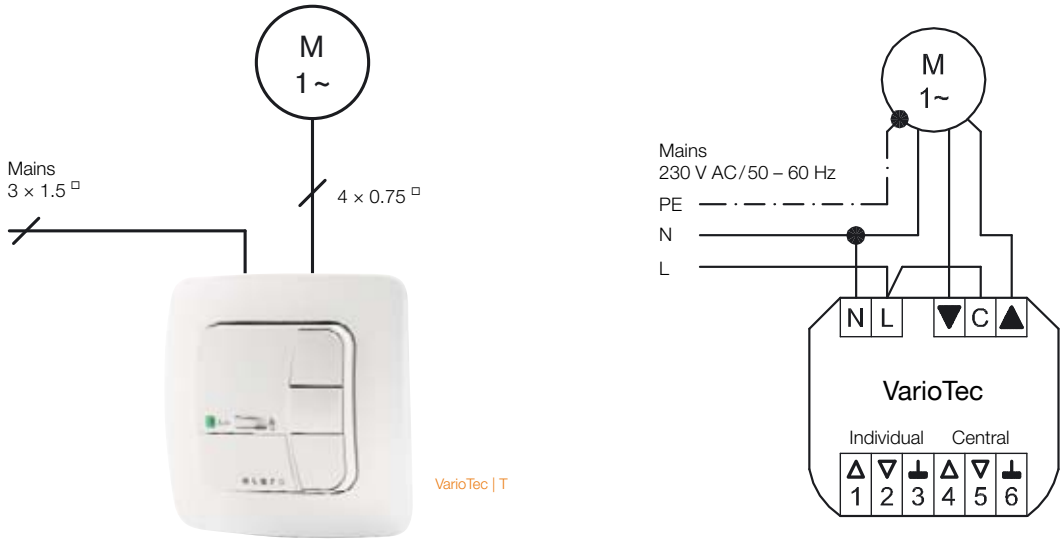

AstroTec
Lumo

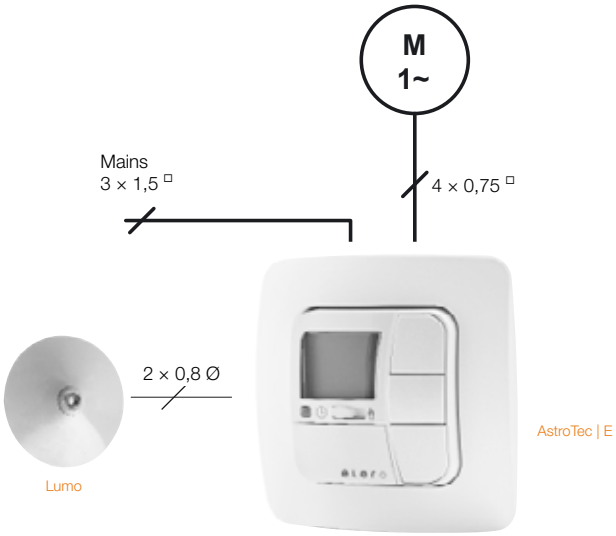

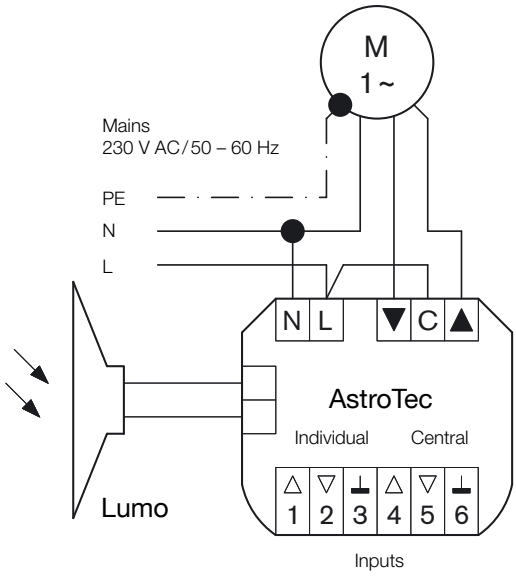

AeroTec
Aero, Thermostat, Aquero

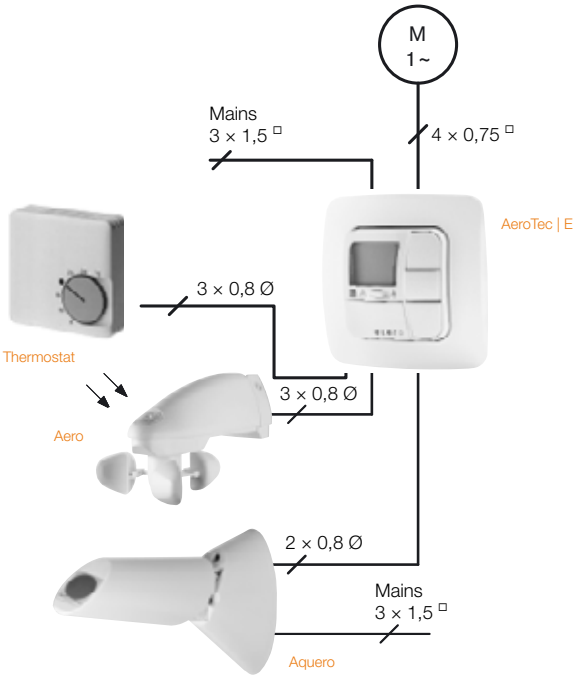

Note!
Use shielded control cable . . . 0.8 mm
or telephone cable JY-ST . . . 0.6 mm

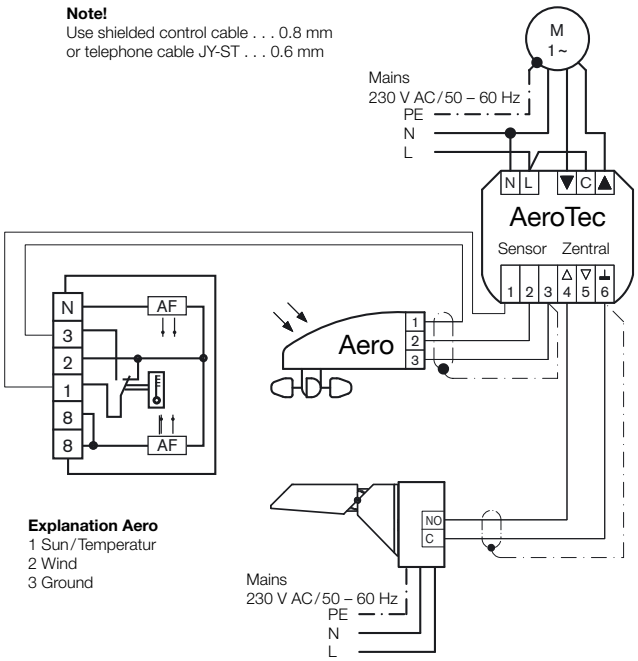

Explanation Aero
1 Sun/Temperatur
2 Wind
3 Ground

MonoTec, AstroTec

Lumo

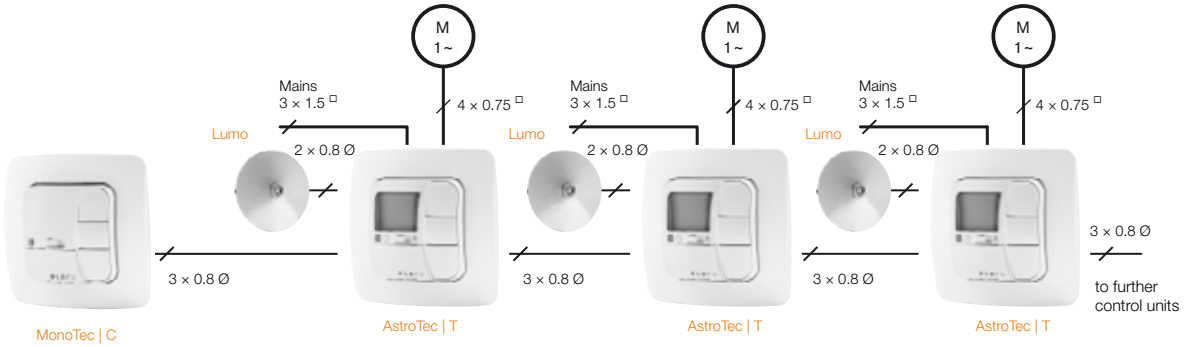

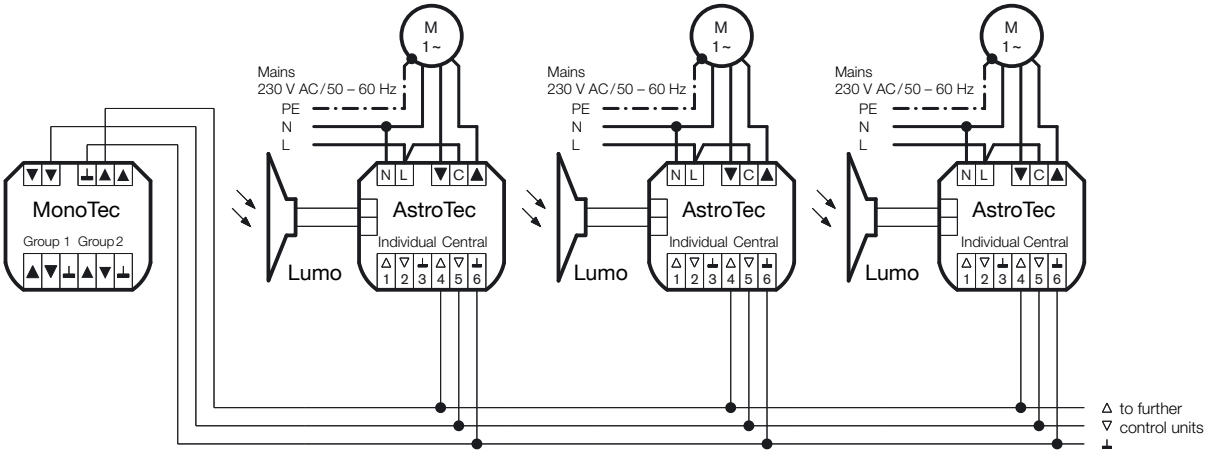

Note!
Use shielded control cable . . . 0.8 mm
or telephone cable JY-ST . . . 0.6 mm.

AstroTec, VarioTec, Push-button

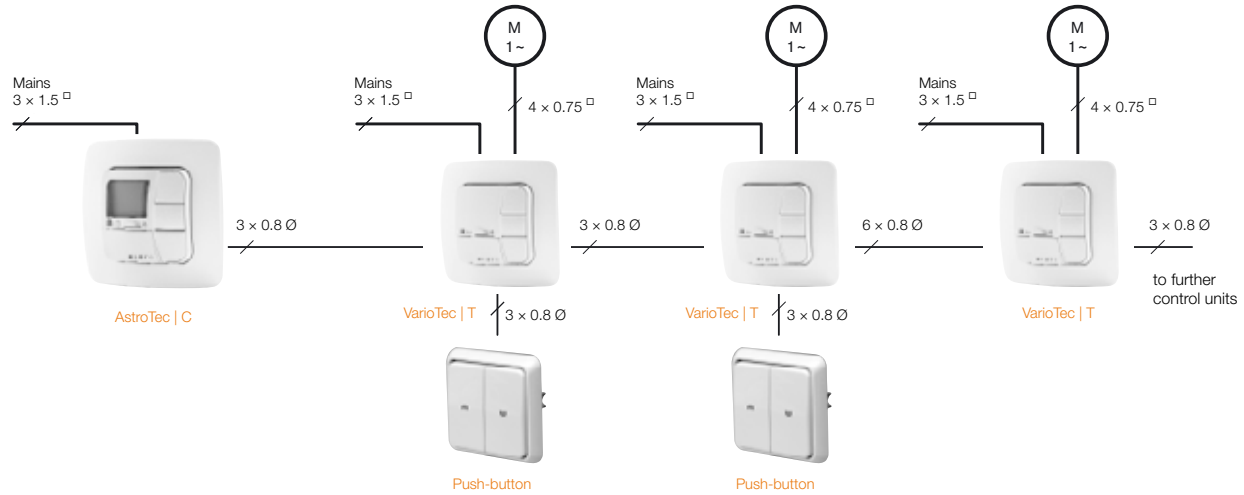

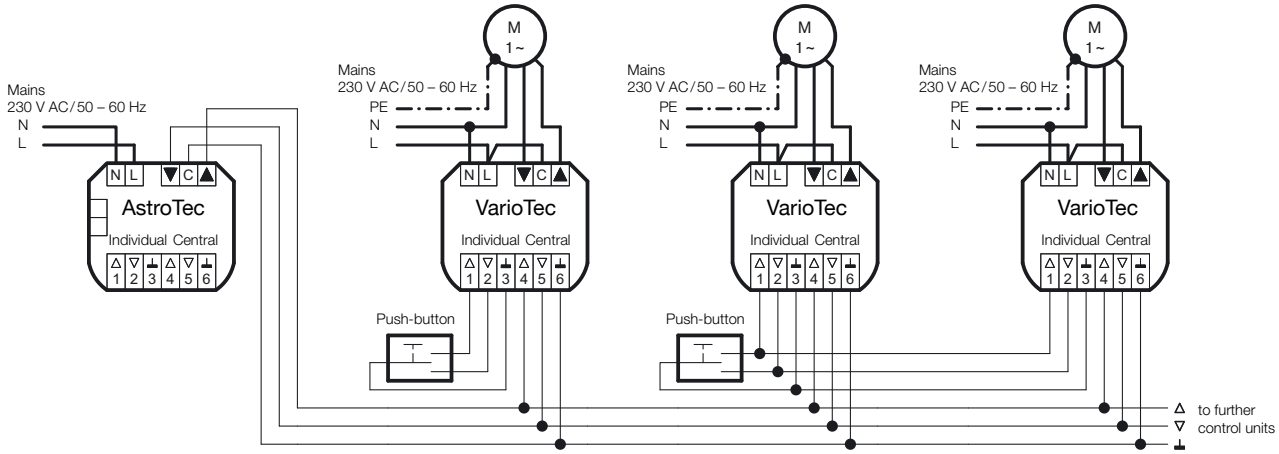

Note!
Use shielded control cable . . . 0.8 mm
or telephone cable JY-ST . . . 0.6 mm.

AstroTec, MonoTec, VarioTec

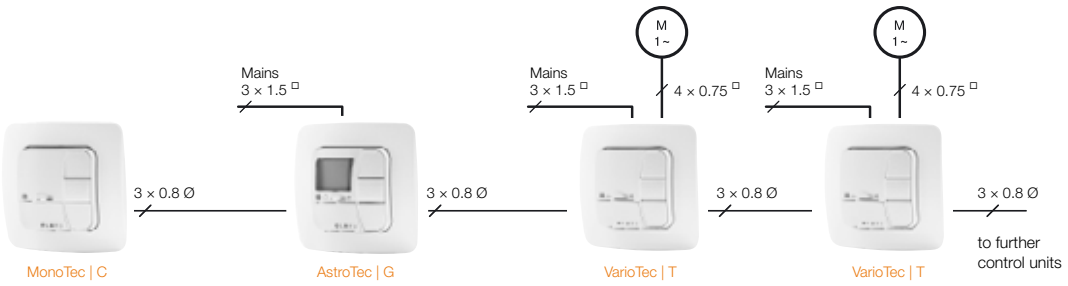

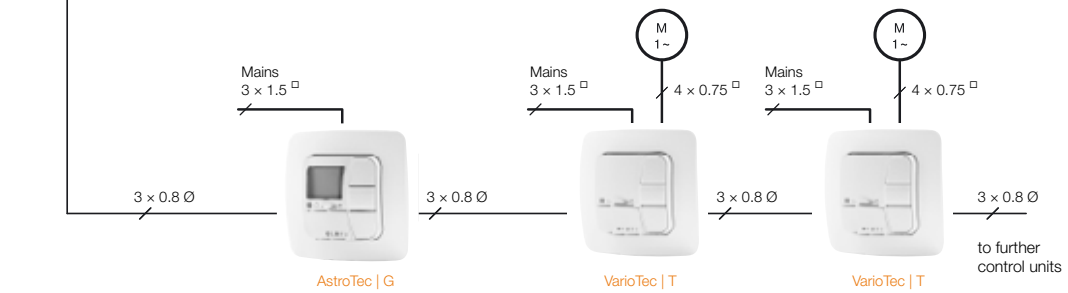

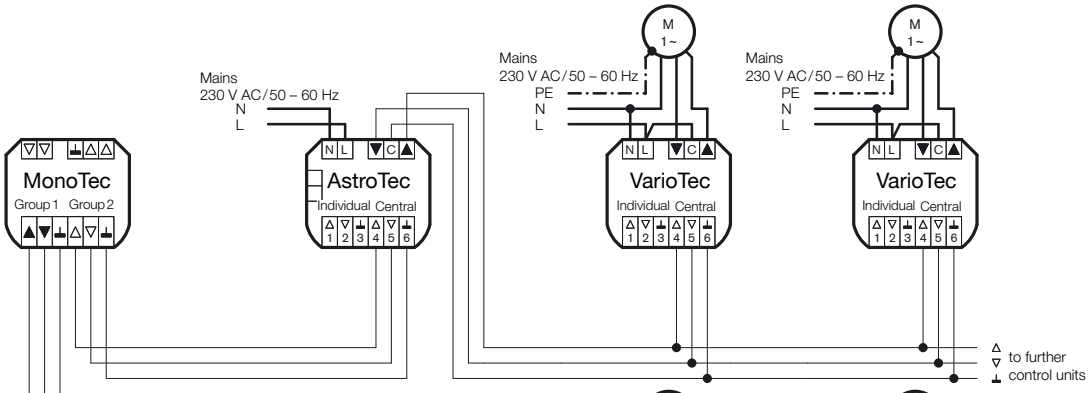

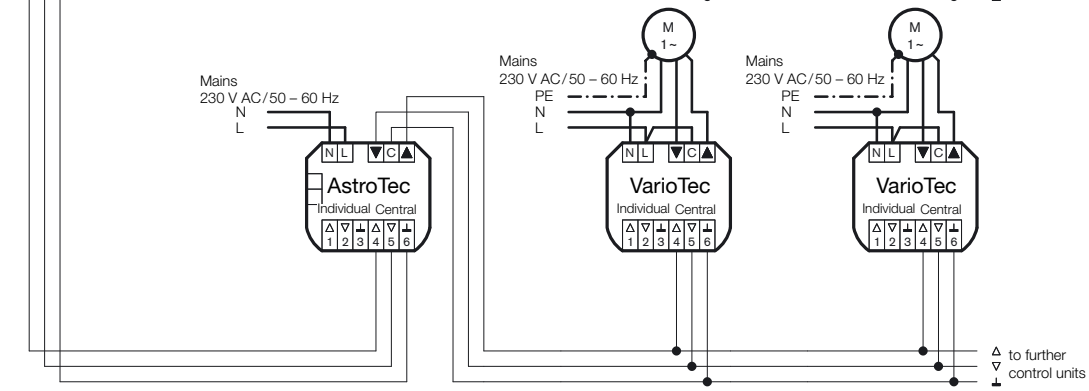

Note!
Use shielded control cable . . . 0.8 mm
or telephone cable JY-ST . . . 0.6 mm.

AstroTec, SoloTel 2, VarioTec, VarioTec-868, Push-button

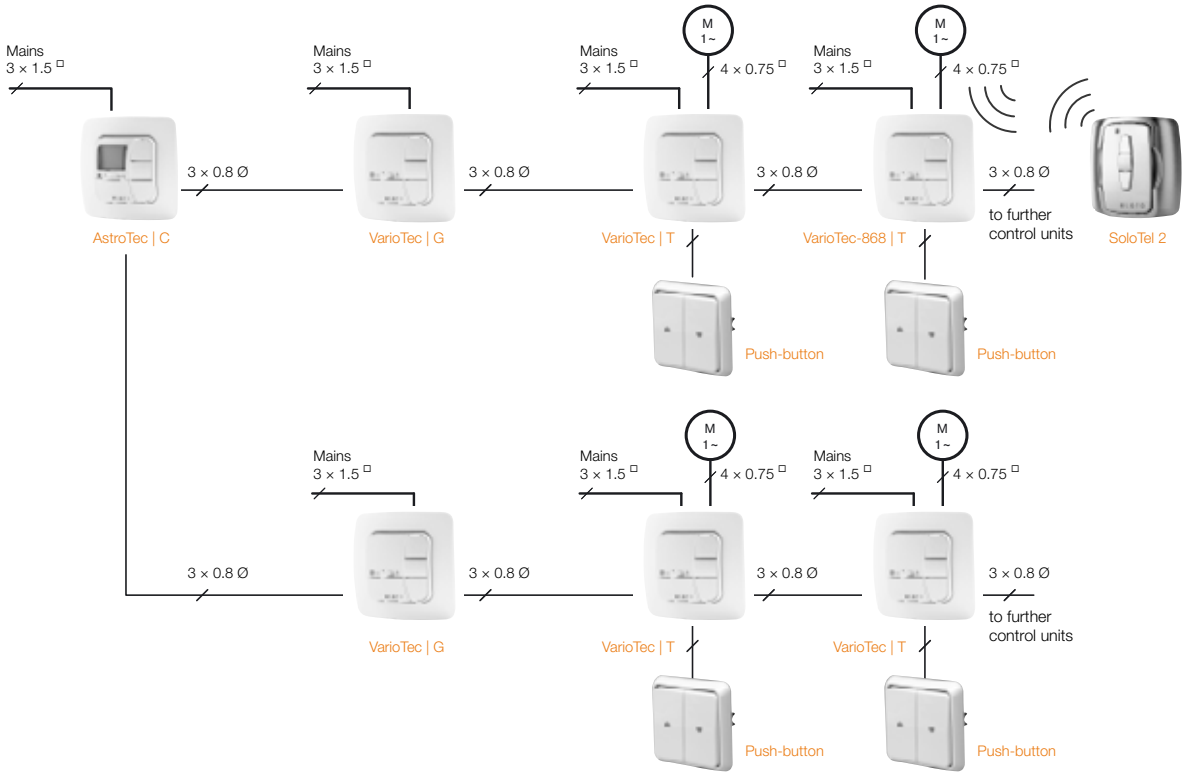

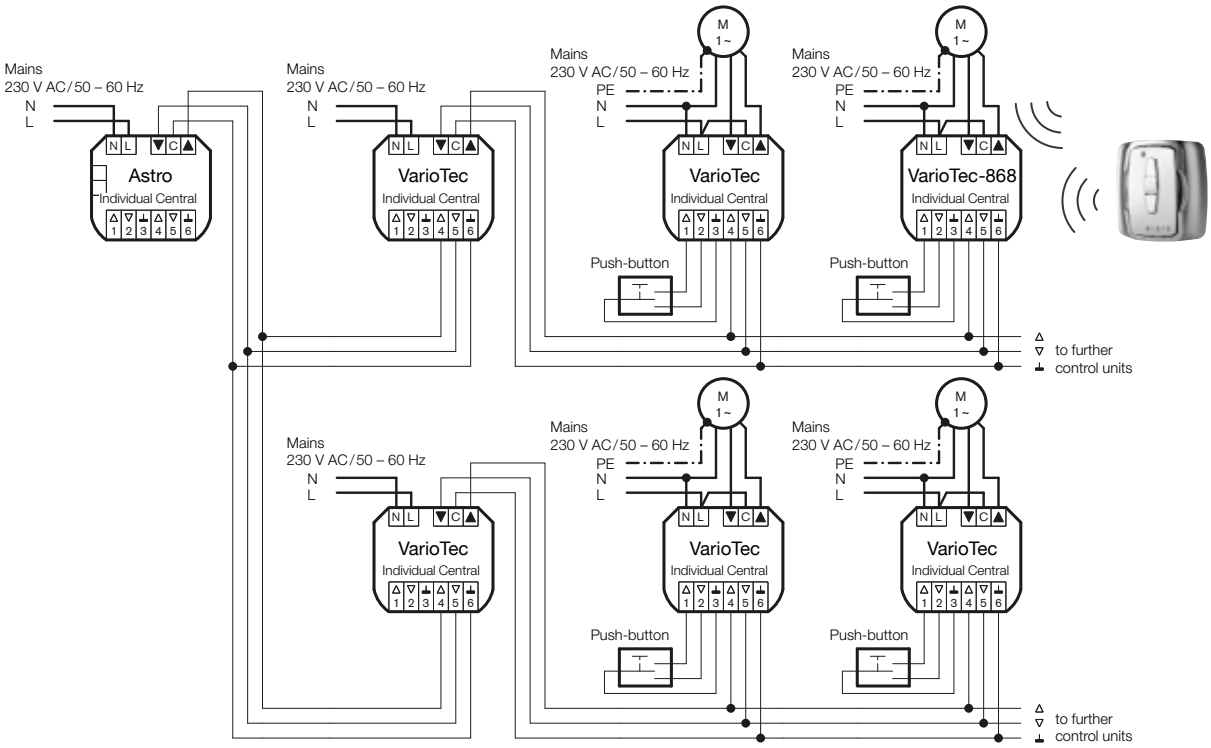

Note!
Use shielded control cable . . . 0.8 mm
or telephone cable JY-ST . . . 0.6 mm.

AeroTec, MonoTec, VarioTec

Lumo, Sequencing relay for 1 or 2 motors

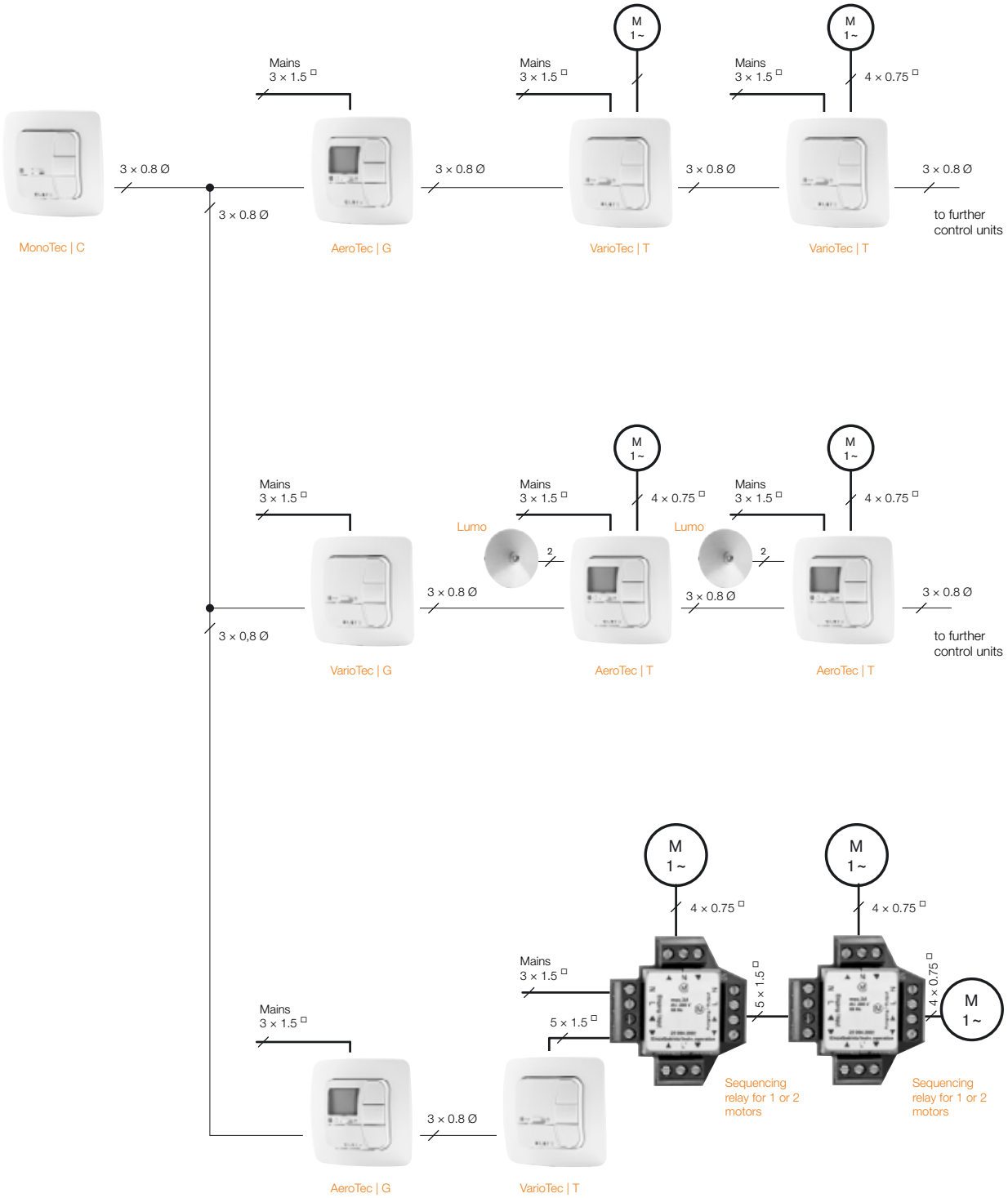

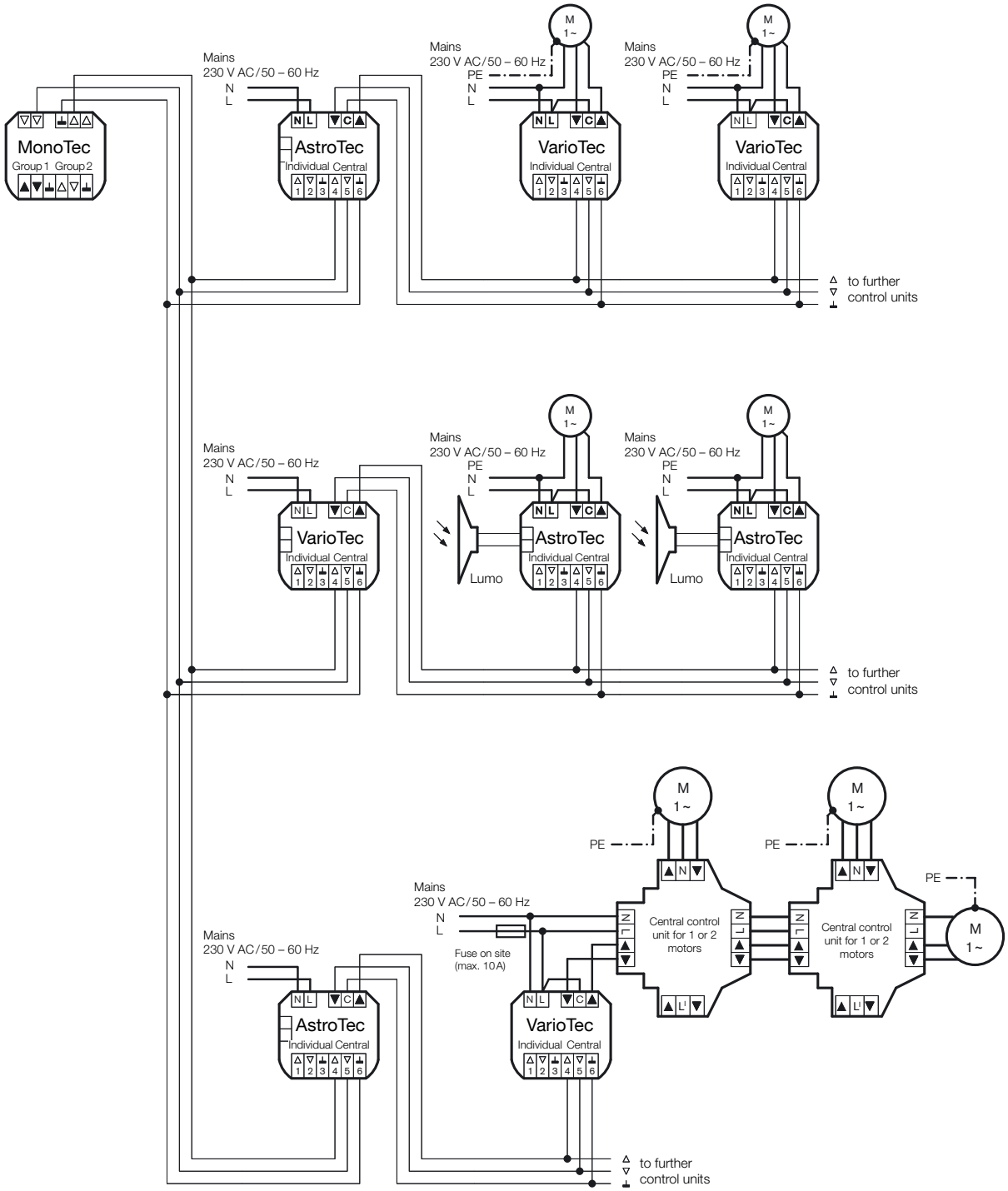

Note!
Use shielded control cable . . . 0.8 mm
or telephone cable JY-ST . . . 0.6 mm.

AeroTec, VarioTec

Aero, Lumero, Sequencing relay for 1 or 2 motors

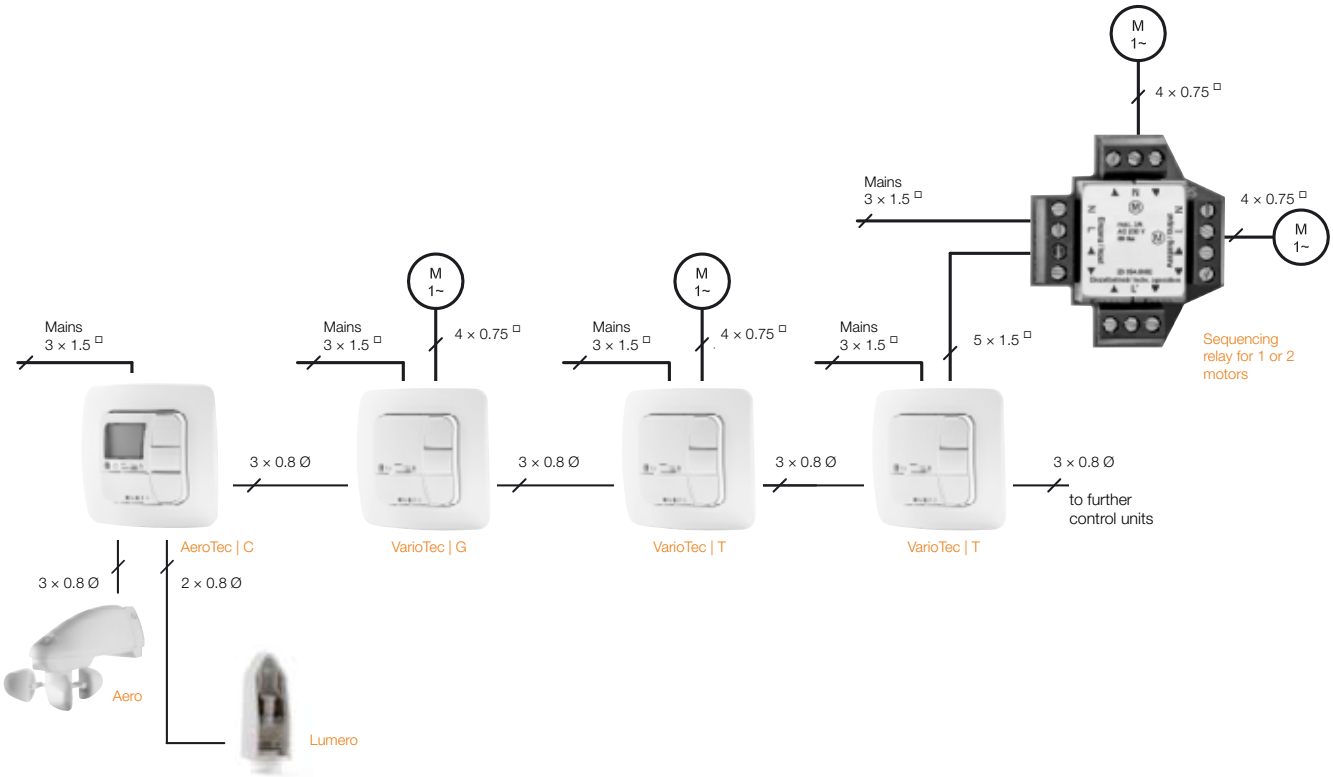

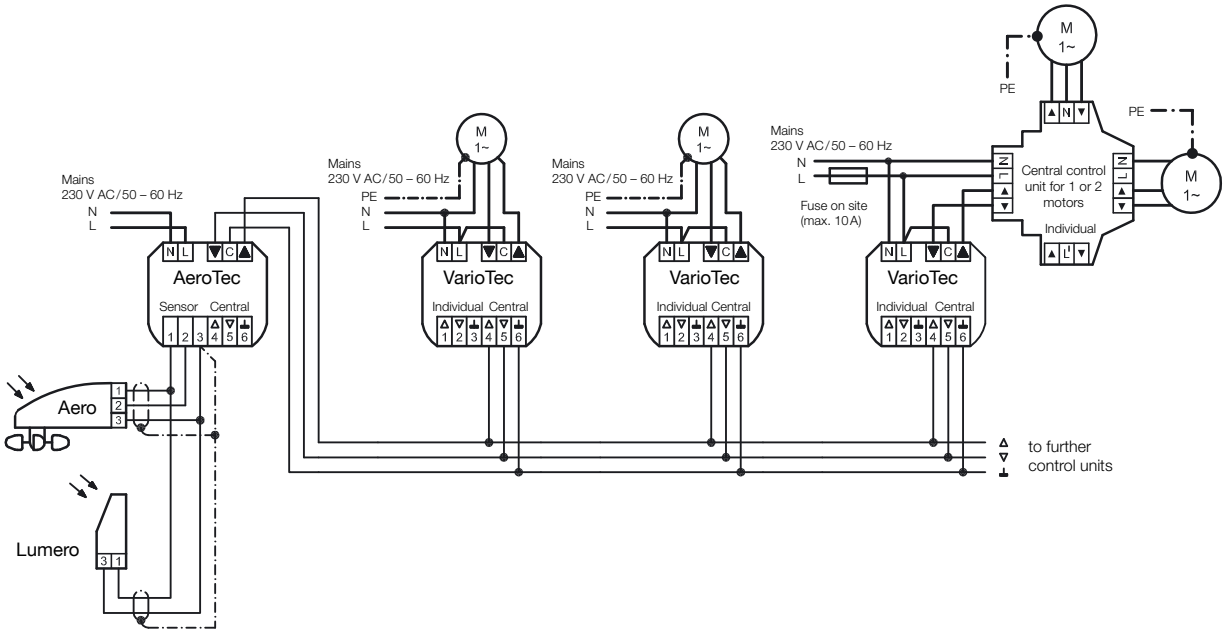

Explanation of terminals Aero
1 Sun
2 Wind
3 Ground

Note!
Use shielded control cable . . . 0.8 mm
or telephone cable JY-ST . . . 0.6 mm.

AeroTec,
Aero, Lumero

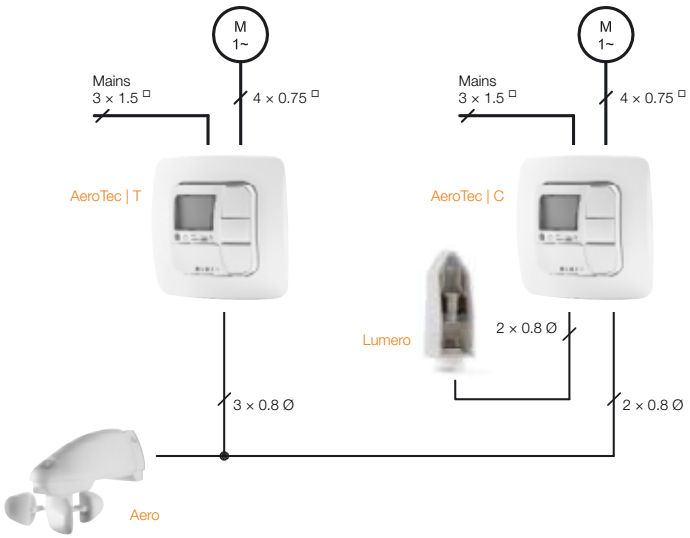

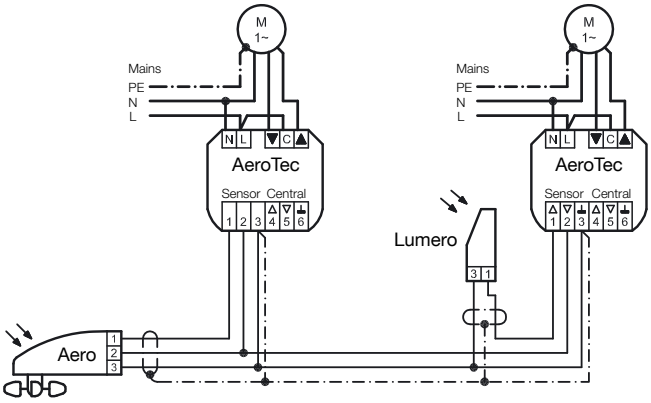

Note!
Use shielded control cable . . . 0.8 mm
or telephone cable JY-ST . . . 0.6 mm.

AeroTec, MonoTec, VarioTec

Aero, Sequencing relay for 1 or 2 motors

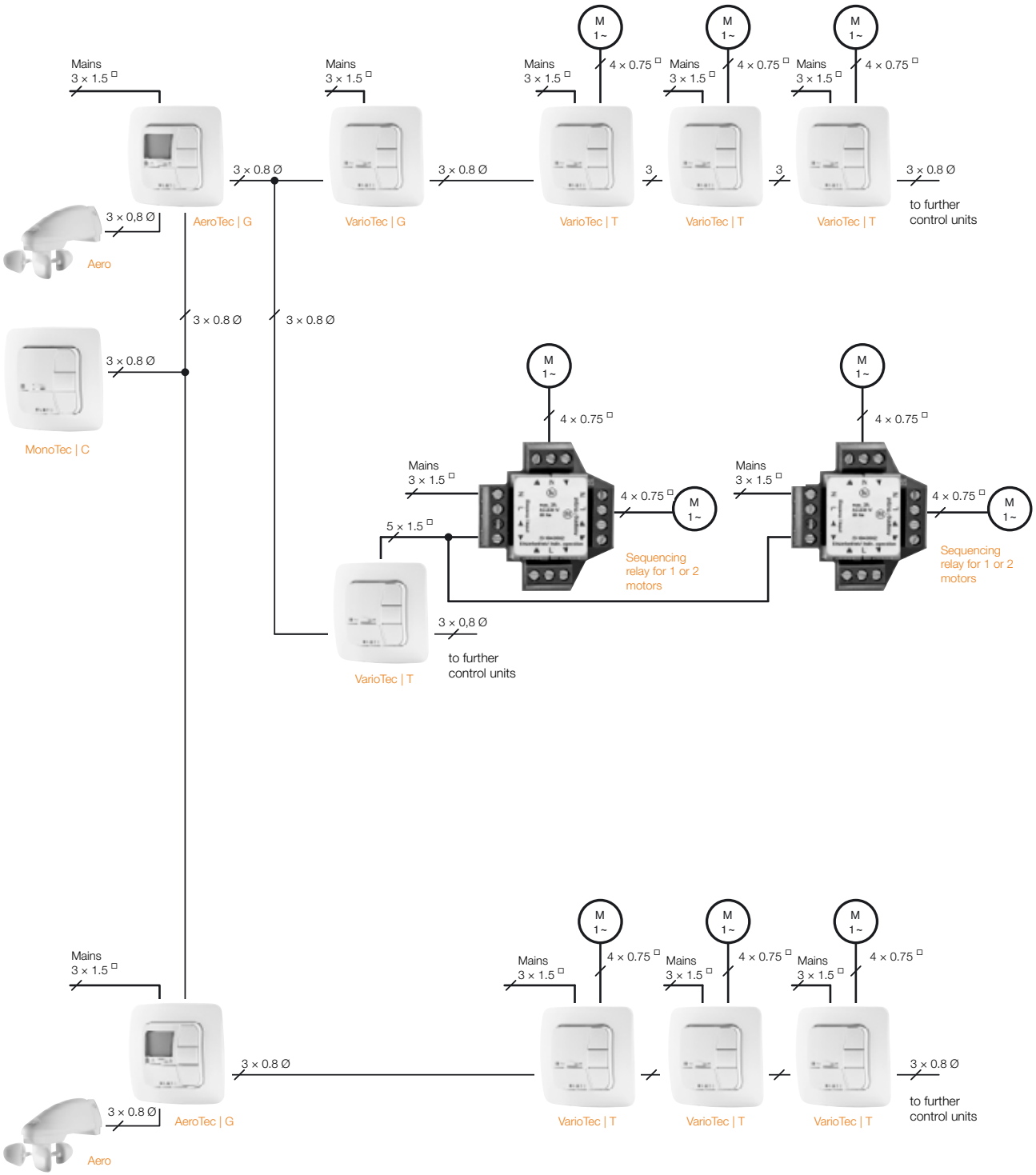

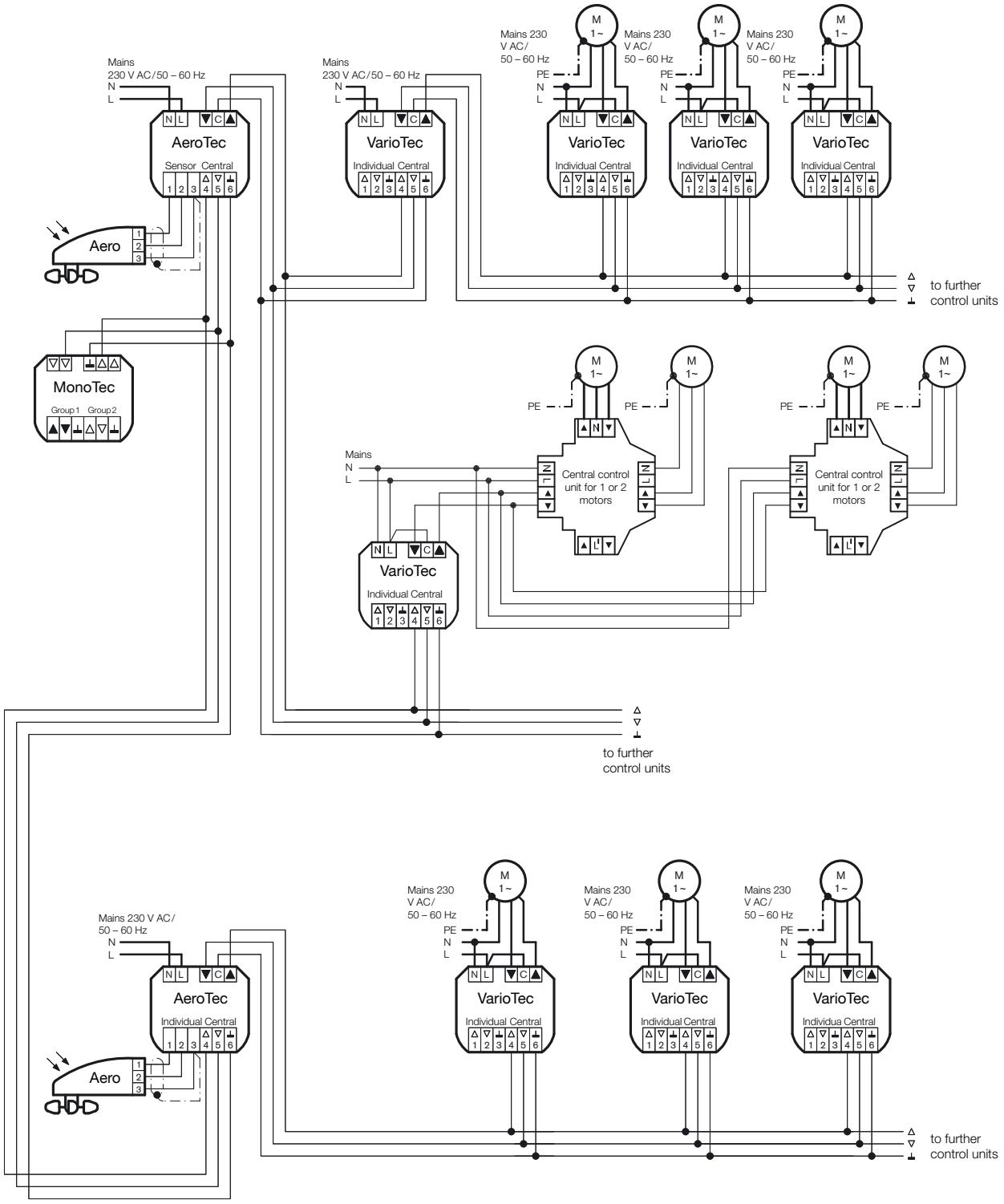

Explanation of terminals Aero
1 Sun
2 Wind
3 Ground

Note!
Use shielded control cable . . . 0.8 mm
or telephone cable JY-ST . . . 0.6 mm.

AeroTec, MonoTec, VarioTec, Push-button

Aero, Lumero, Ventero

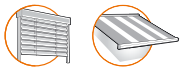

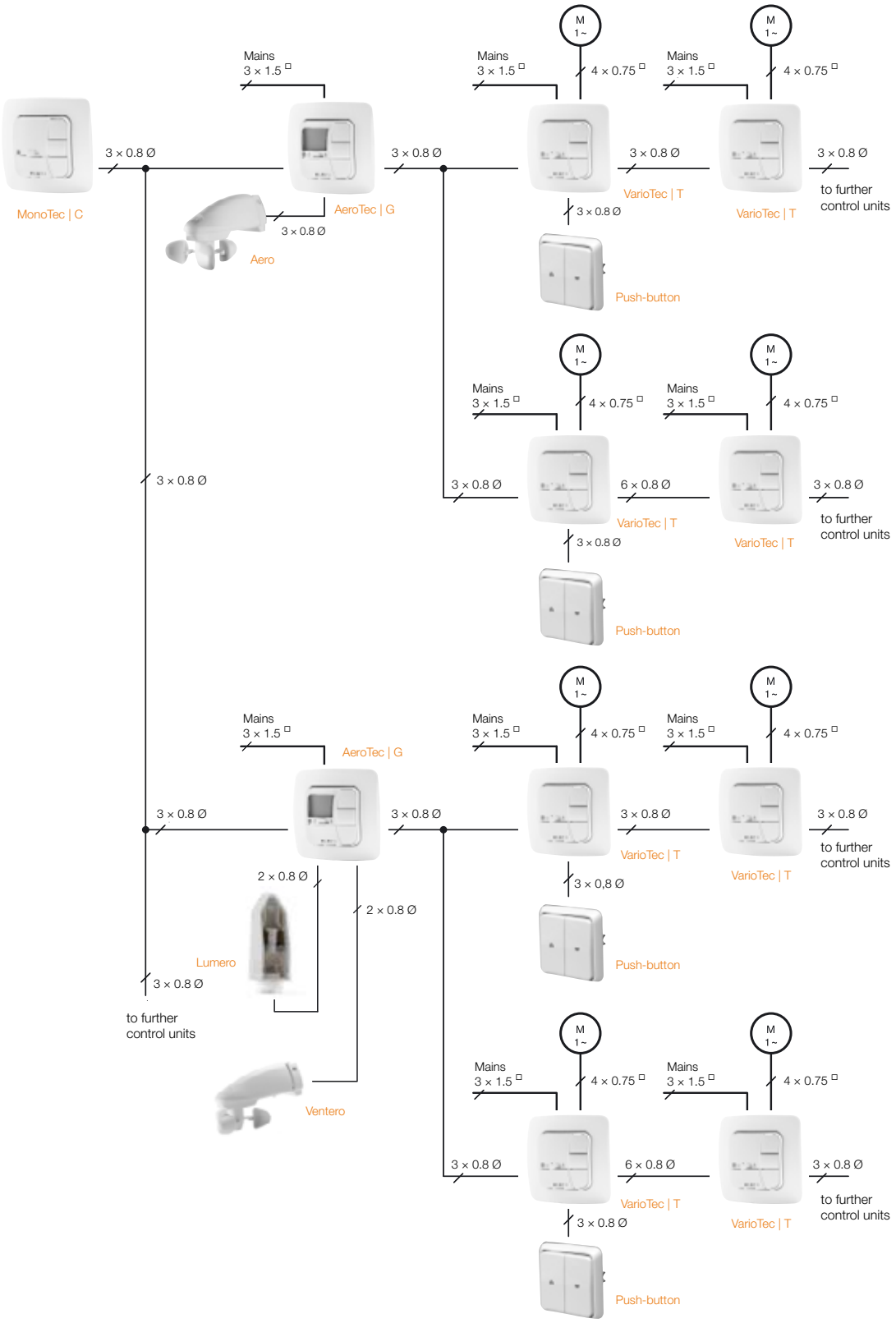

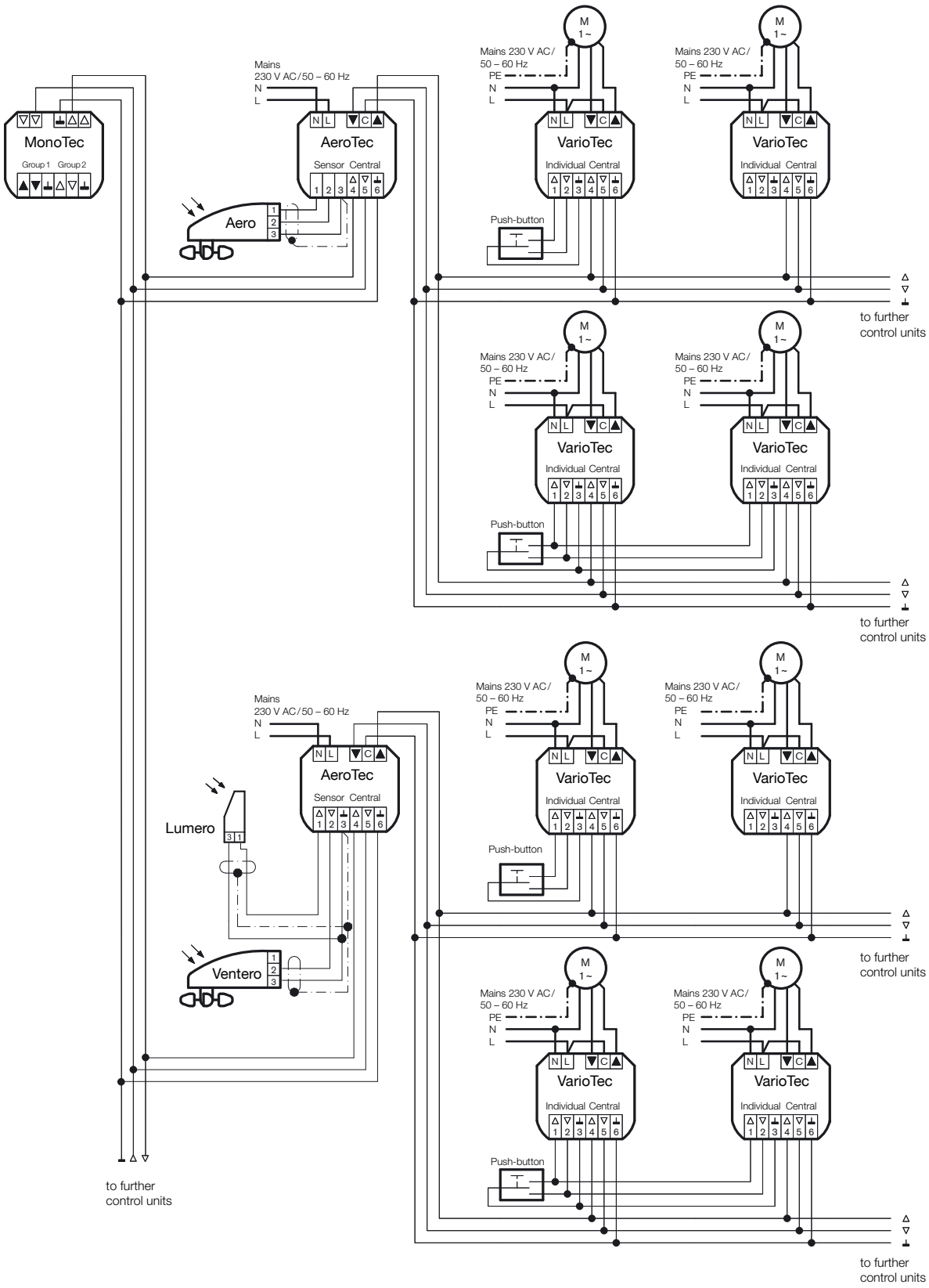

Explanation of terminals Aero
1 Sun
2 Wind
3 Ground

Note!
Use shielded control cable . . . 0.8 mm
or telephone cable JY-ST . . . 0.6 mm.

AstroTec, AeroTec, MonoTec, VarioTec

Aero

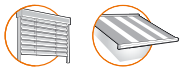

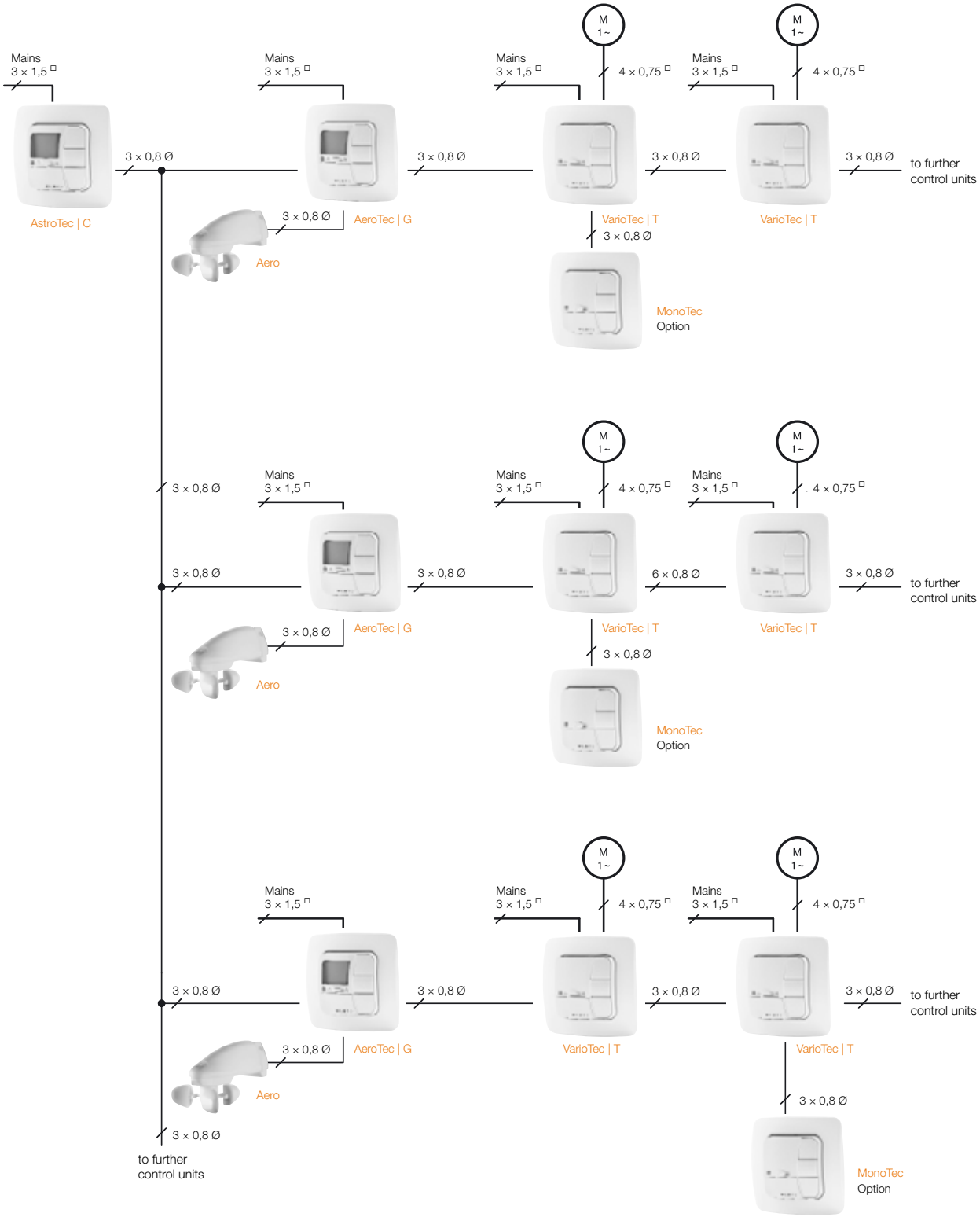

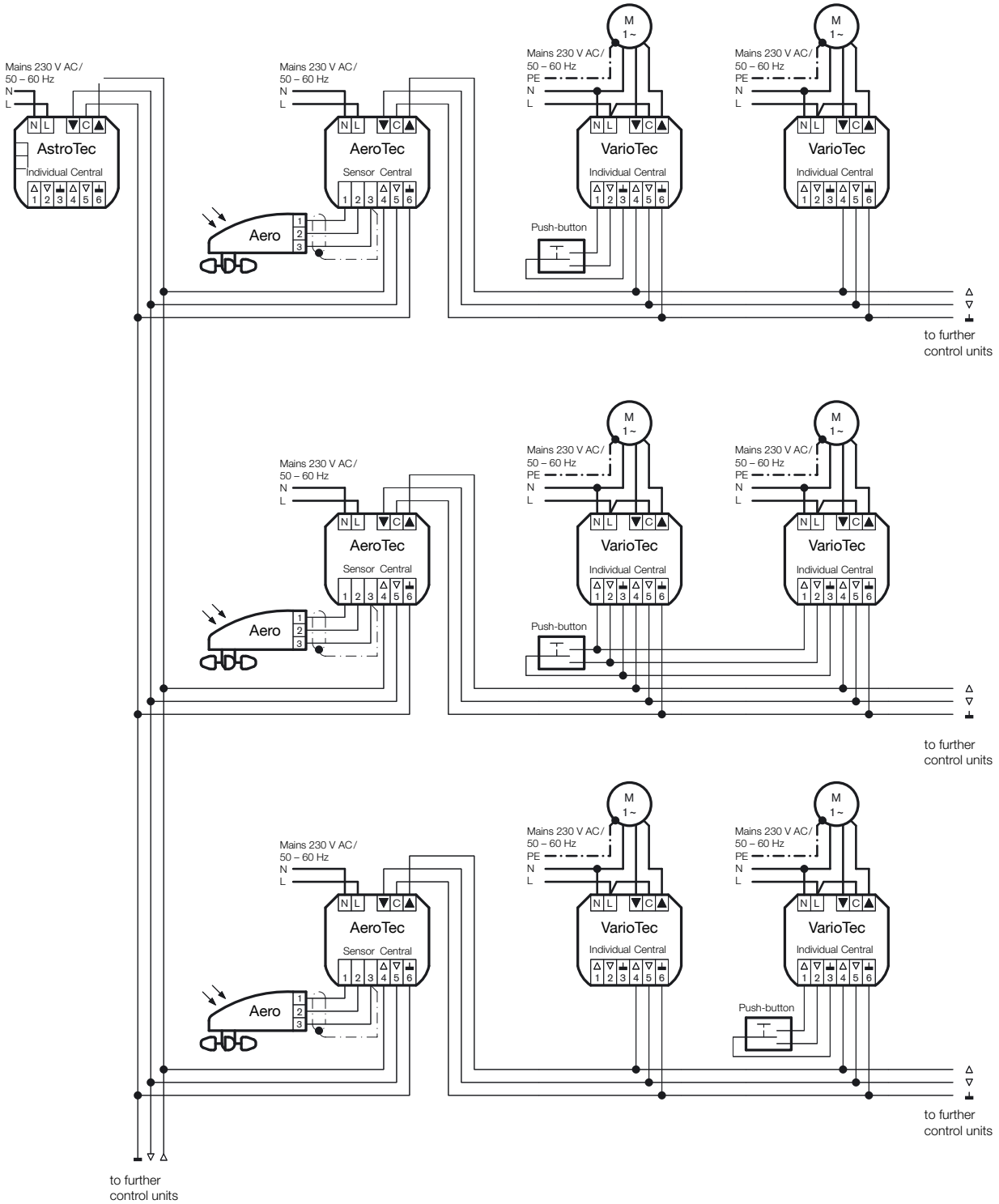

Explanation of terminals Aero
1 Sun
2 Wind
3 Ground

Note!
Use shielded control cable . . . 0.8 mm
or telephone cable JY-ST . . . 0.6 mm.

AstroTec, AeroTec, VarioTec, Objecta, Group command switch

Thermostat, Aquero, Lumero, Ventero

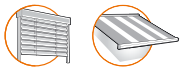

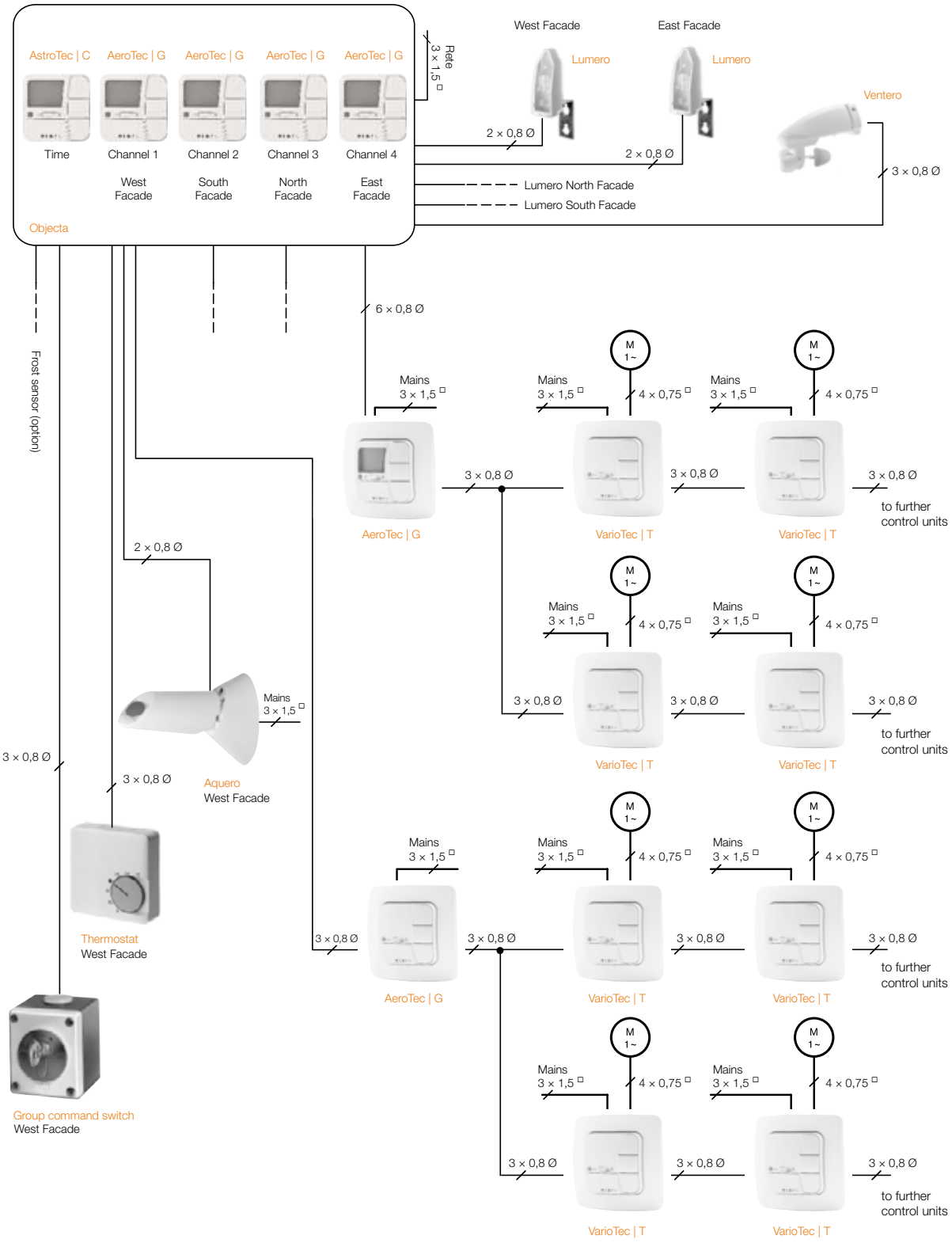

Note!
Use shielded control cable . . . 0.8 mm
or telephone cable JY-ST . . . 0.6 mm.

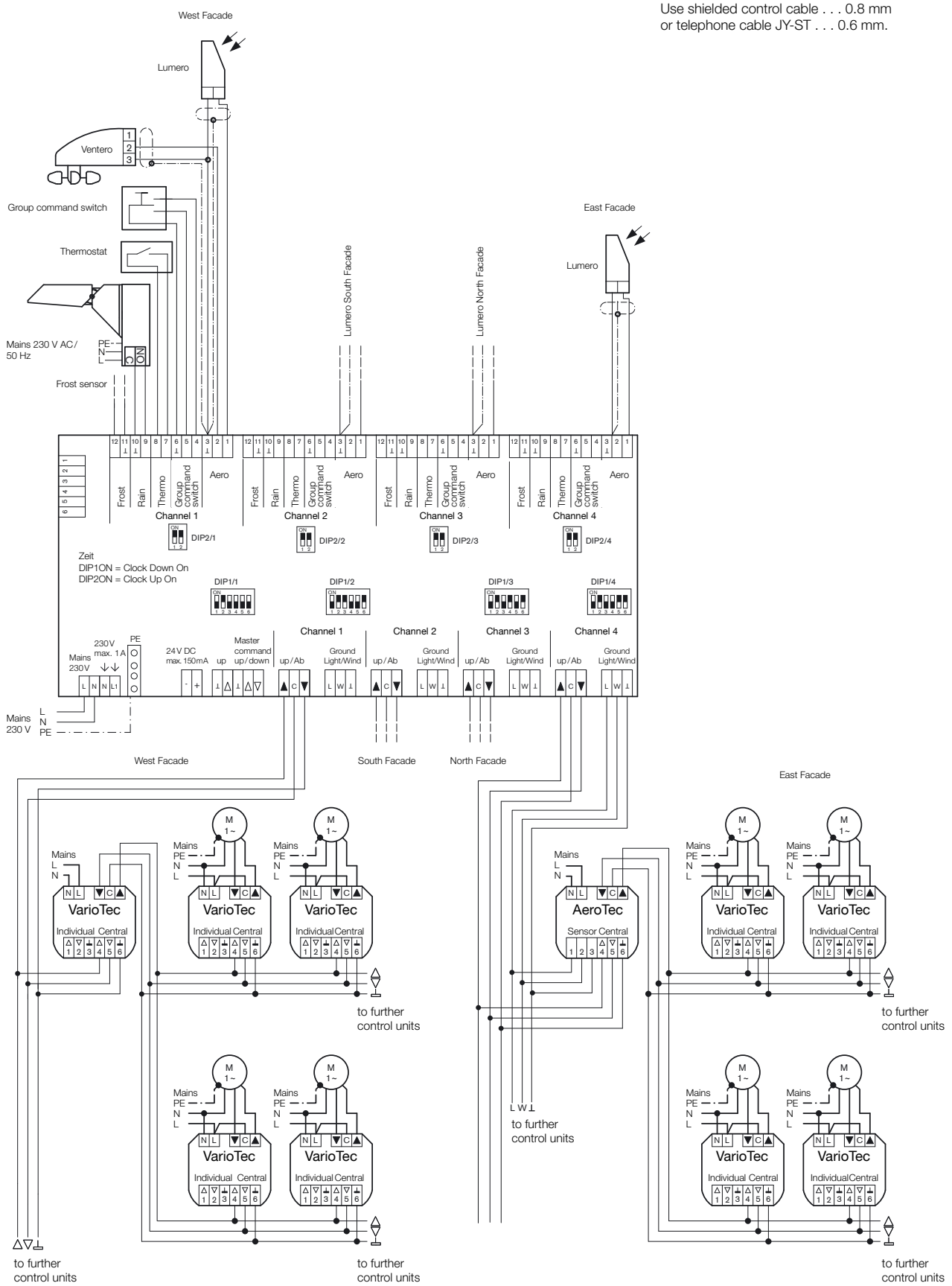

AeroControl, Venetian blind switch

Ventero

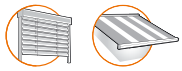

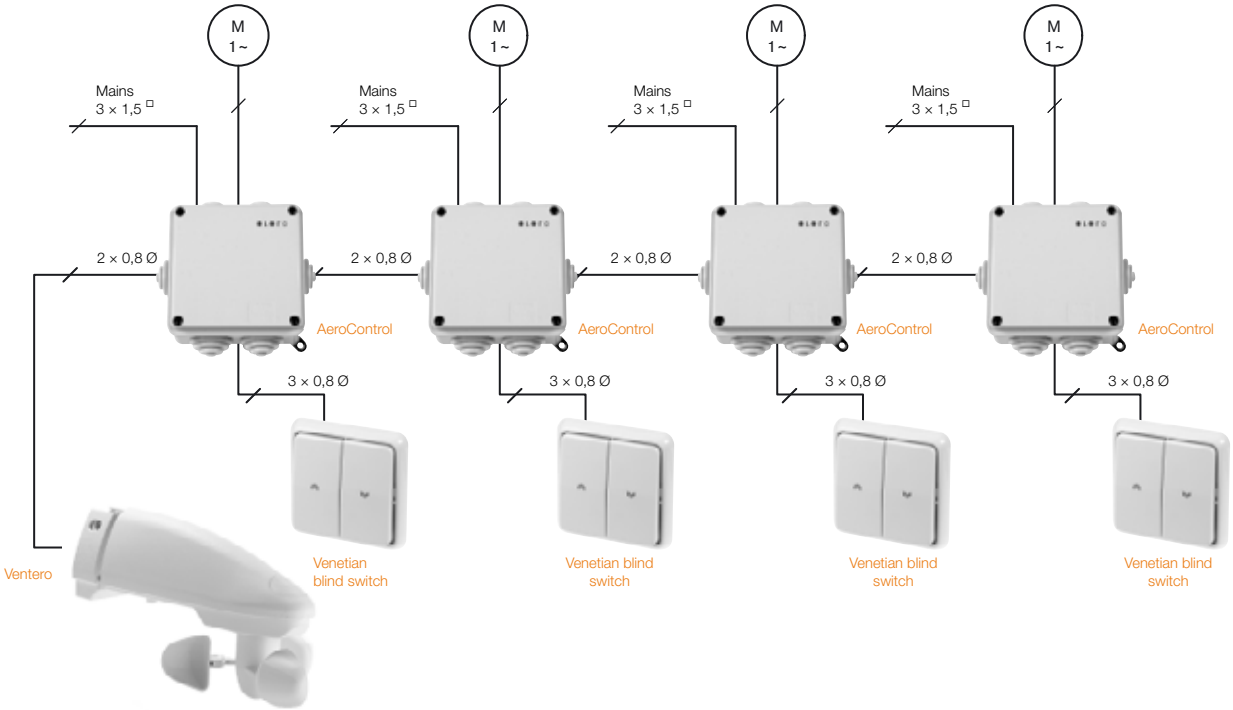

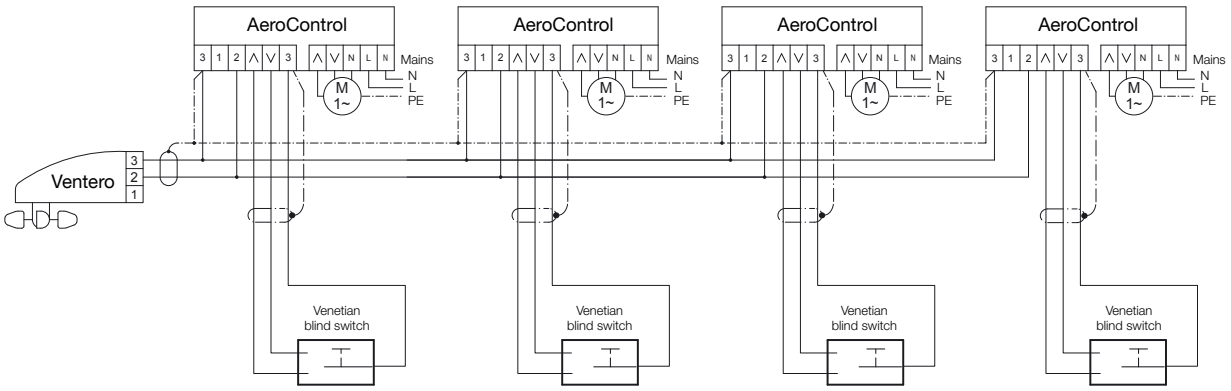

Note!
Use shielded control cable . . . 0.8 mm
or telephone cable JY-ST . . . 0.6 mm.

AeroControl-868, LumeroTel 2

Aero

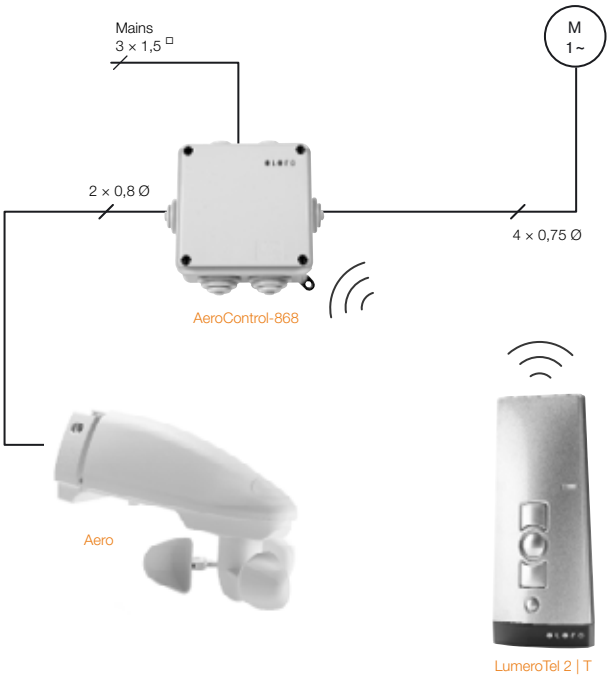

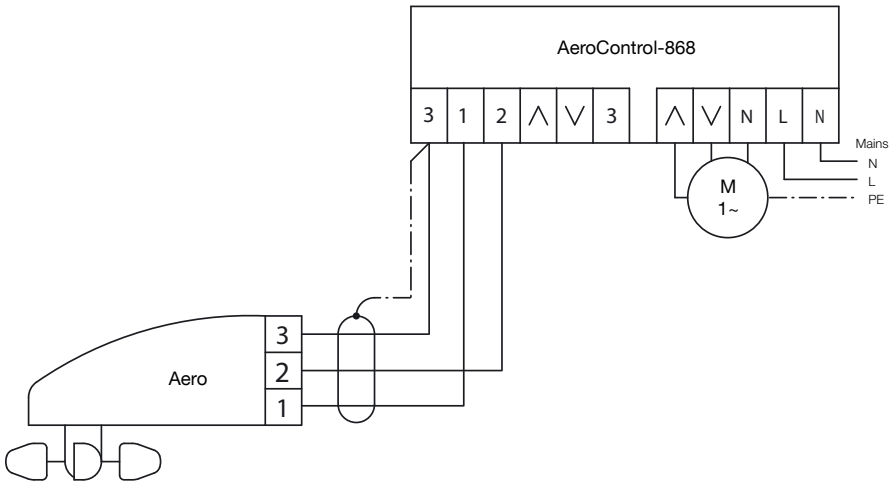

Note!
Use shielded control cable . . . 0.8 mm
or telephone cable JY-ST . . . 0.6 mm.

MonoTel 2, Combio-868 RM

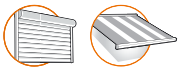

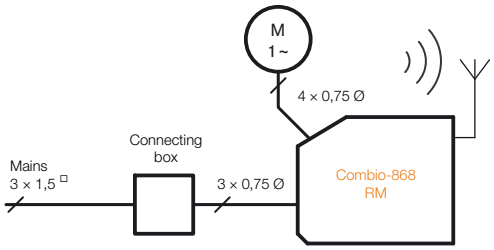

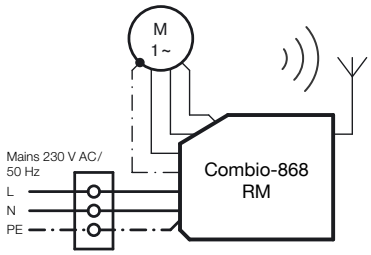

MonoTel 2 | T

MonoTel 2, Combio-868 JA/Pulse

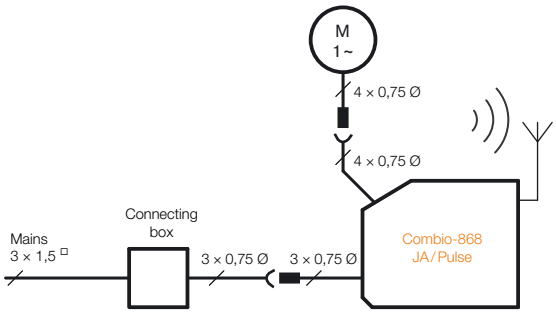

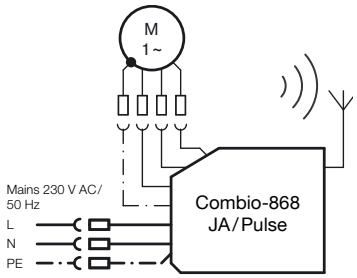

MonoTel 2 | T

VarioTel 2, AstroTec-868 bidi, MultiTel 2, Combio-868 RM

RolTop-868

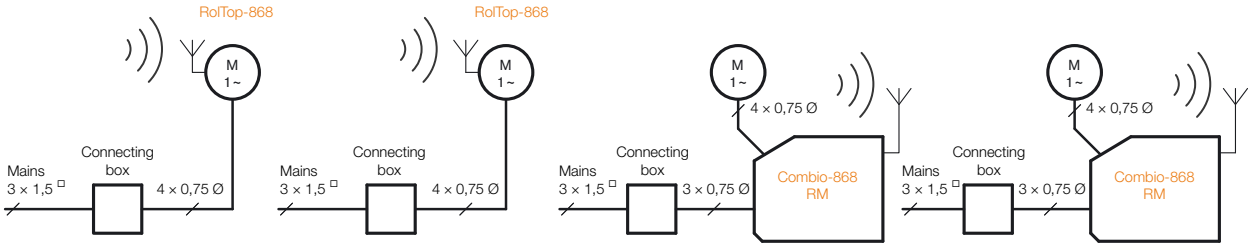

AstroTec-868 bidi | C

VarioTel 2 | C | T

oder

MultiTel 2 | C | G | T

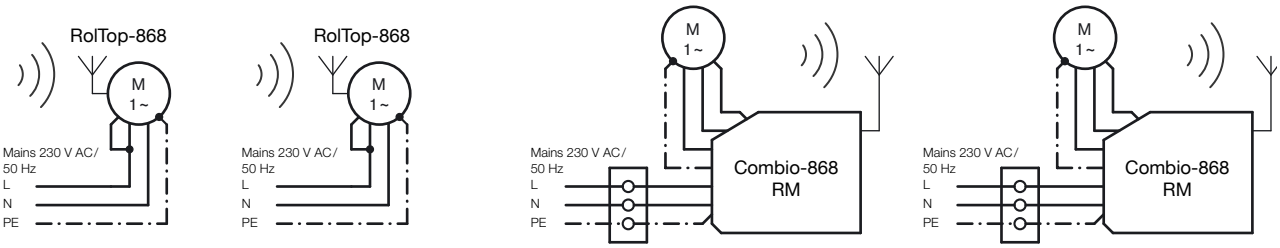

MonoTel 2, VarioTel 2, MultiTel 2, Combio-868 RM / RevoLine

Aero-868, SunTop-868

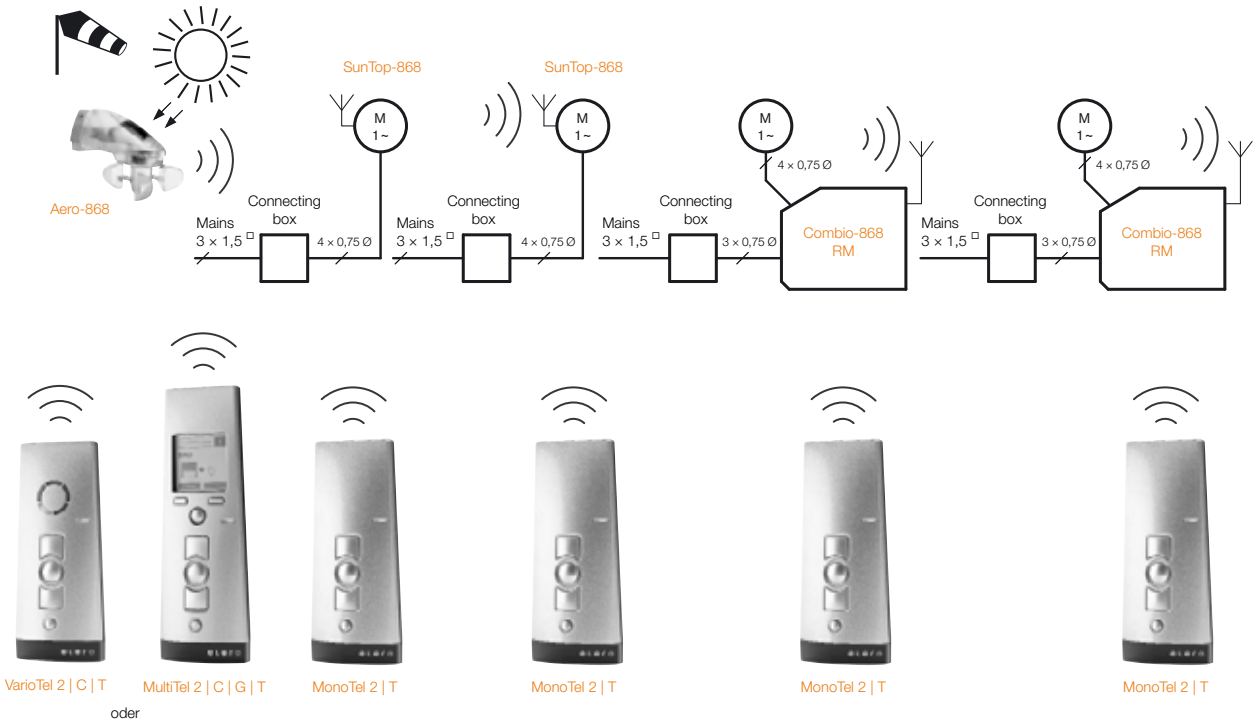

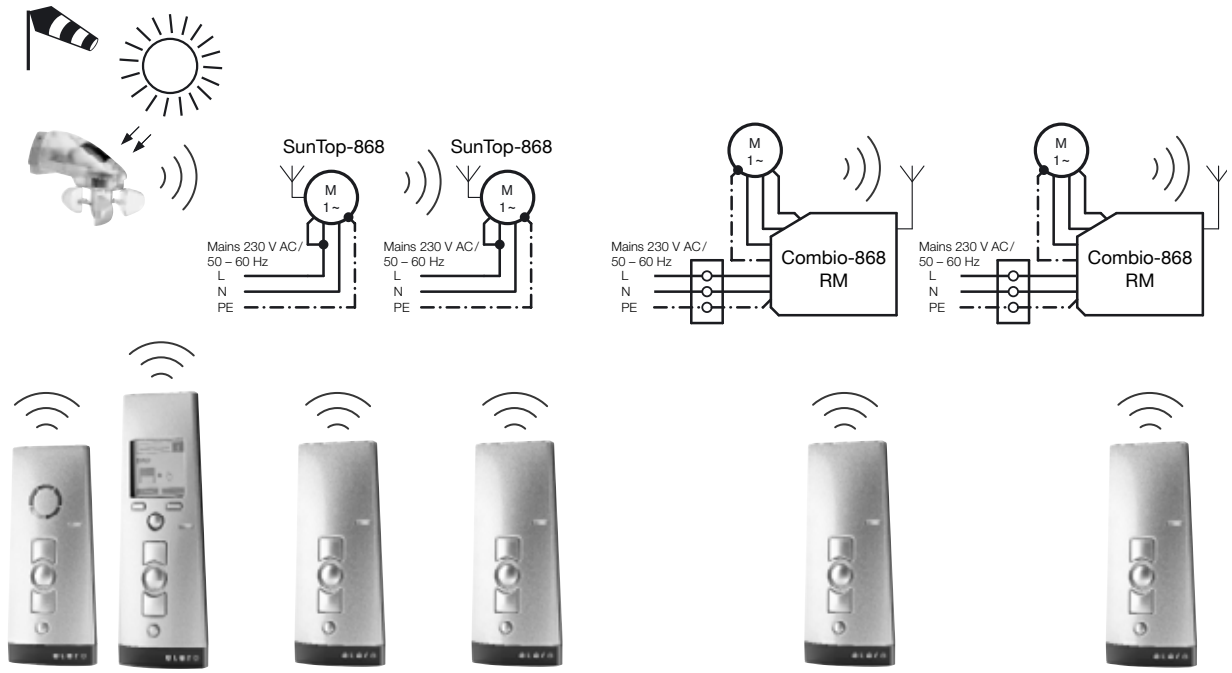

TempoTel 2, Combio-868 RM

RolTop-868

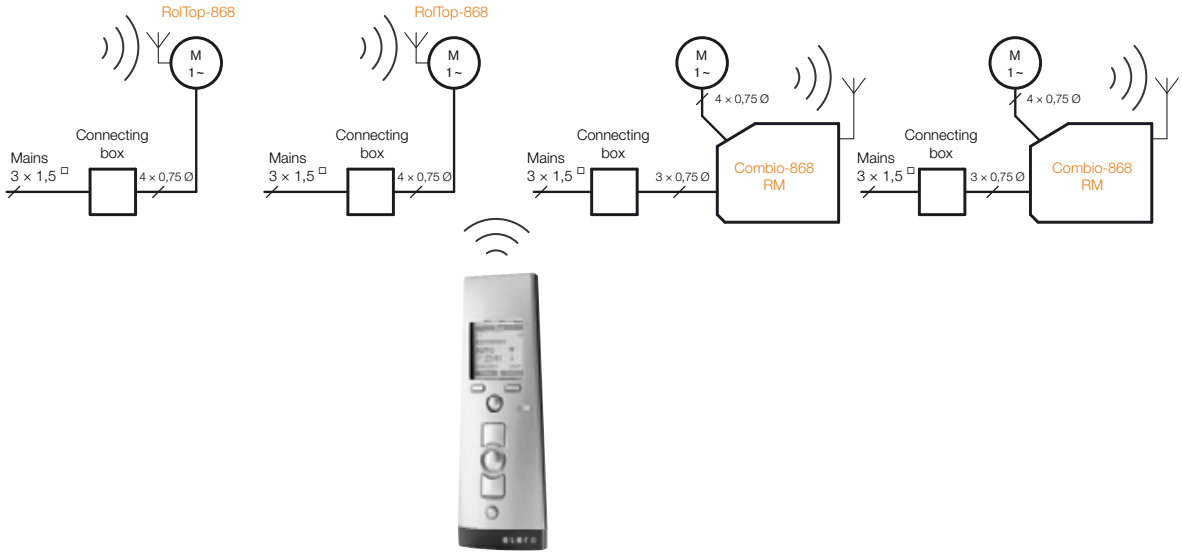

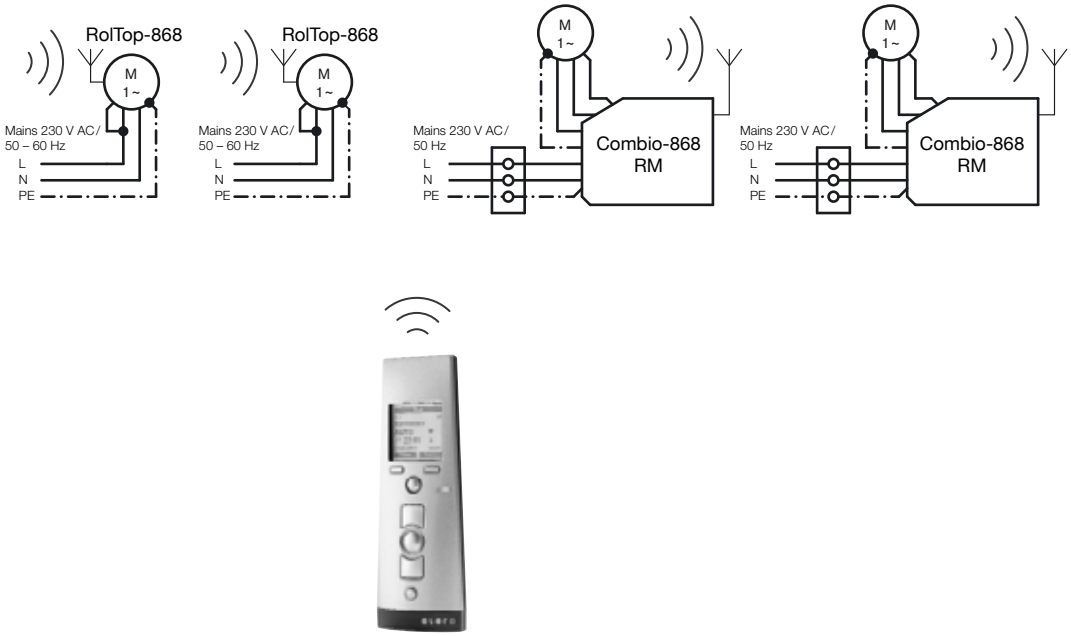

MonoTel 2, Combio-868 JA DC, AstroTec-868, Aero-868 plus

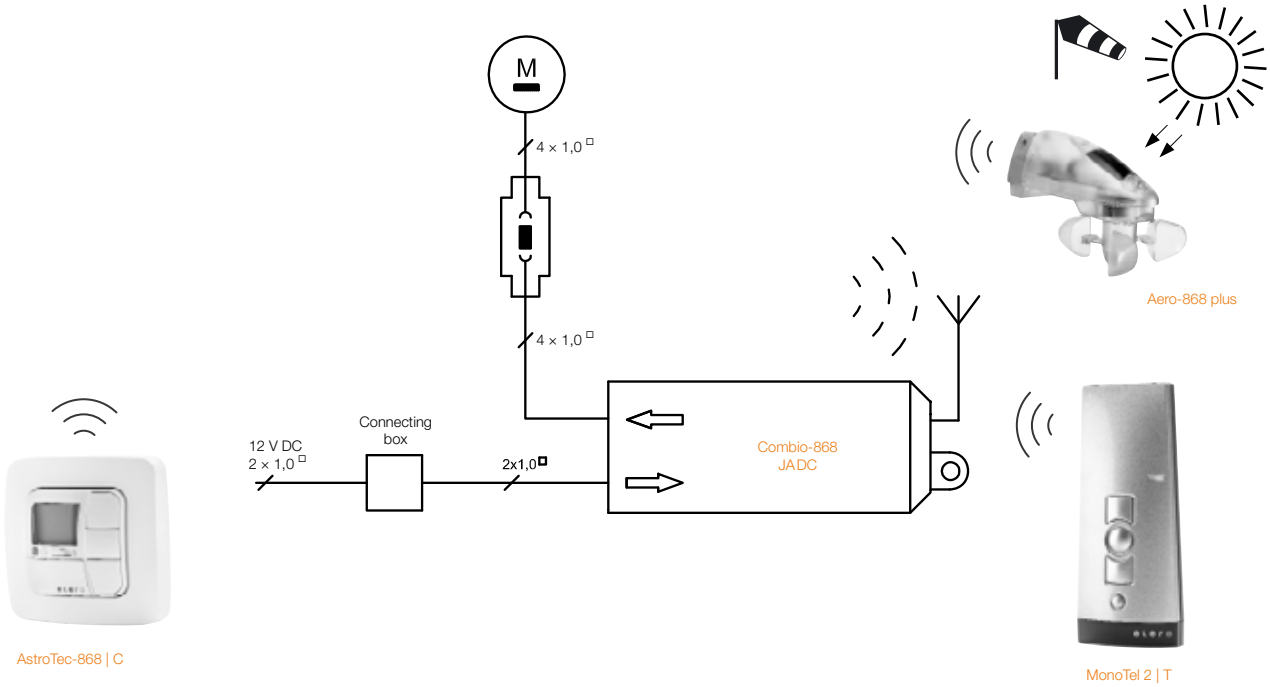

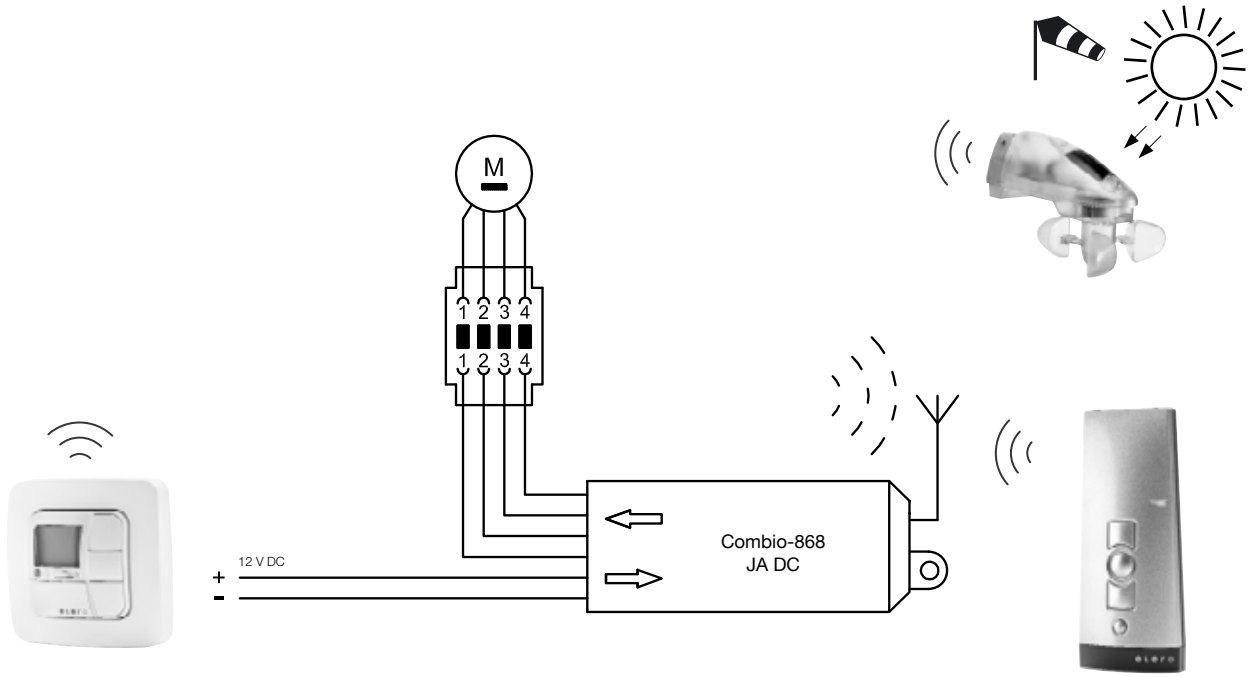

MemoTec-868

RolTop-868

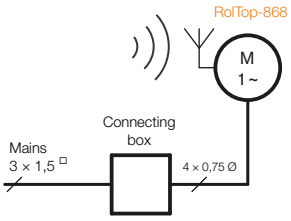

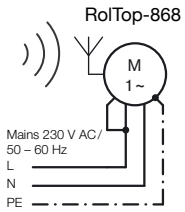

MemoTec-868 | T

MonoTel 2

SunTop-868

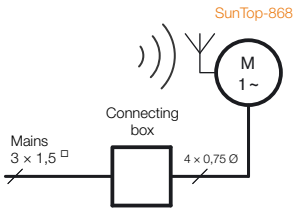

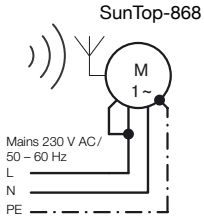

MonoTel 2 | T

MonoTel 2, Combio-868 RM

Lumo-868

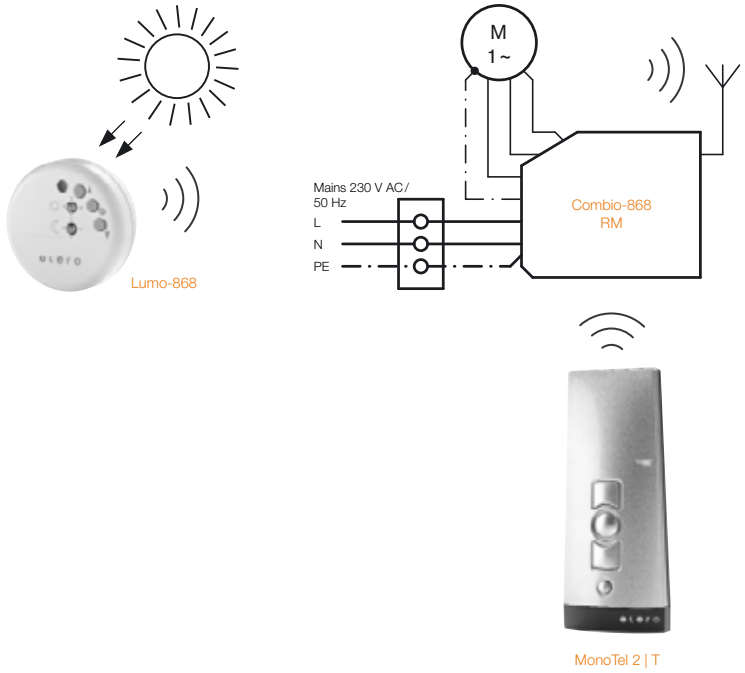

UniTec-868, Combio-868 RM

Ventero-868, Lumero-868

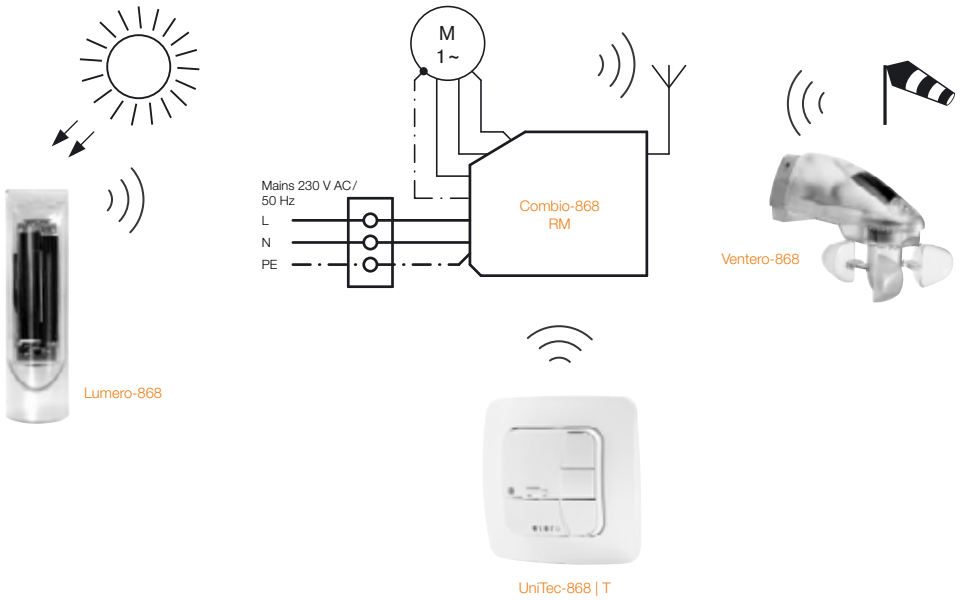

LumeroTel 2, Combio-868 JA/Pulse

Aero-868 Plus

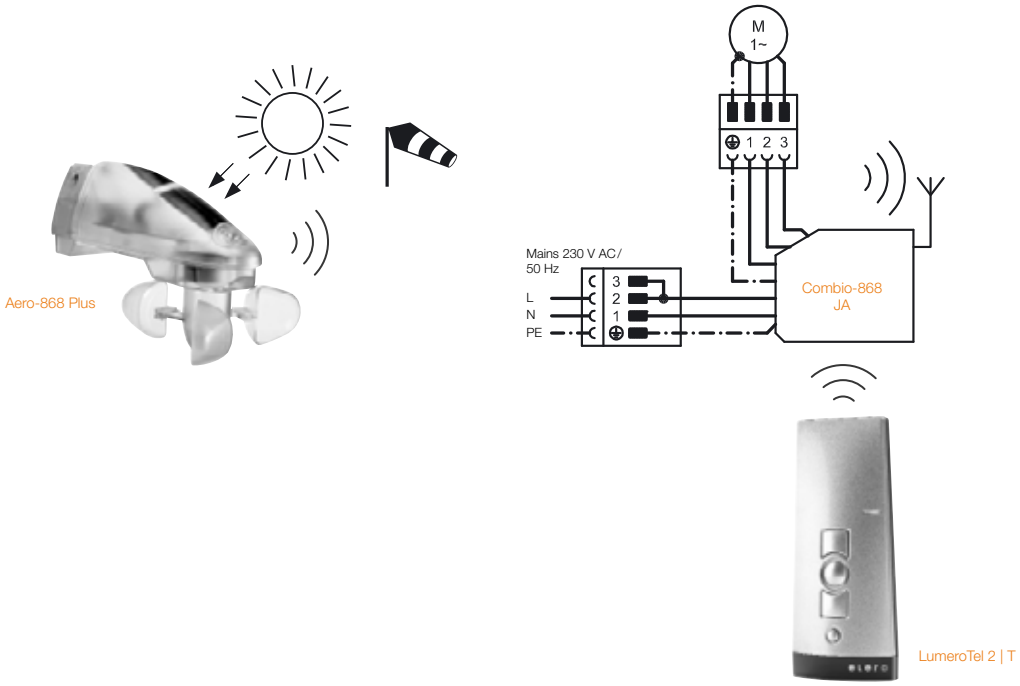

LumeroTel 2, Combio-868 RM STAK3

Sensero-868 AC Plus

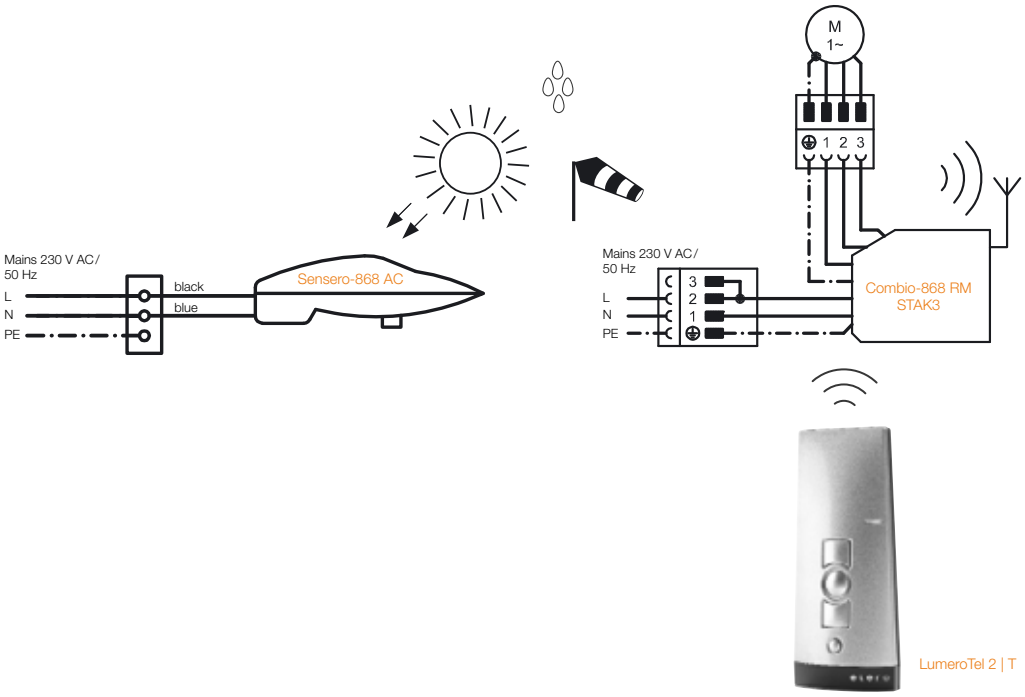

AstroTec, Invio-868, Push-button

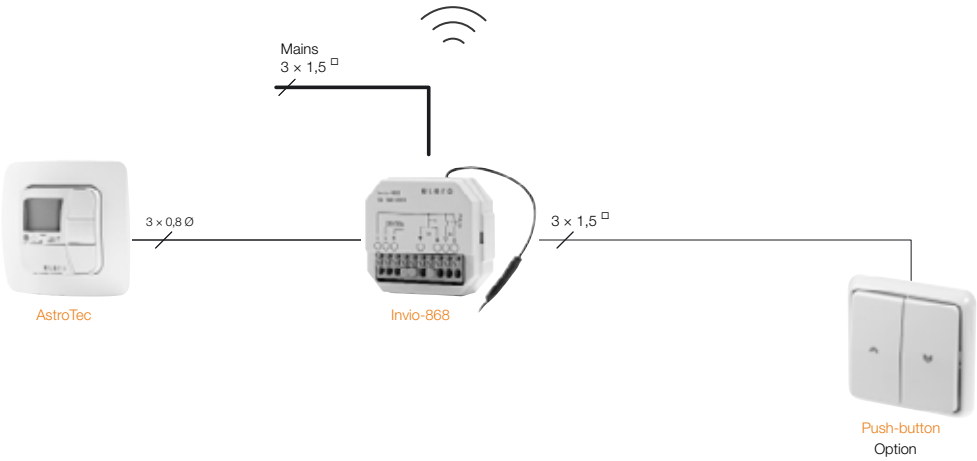

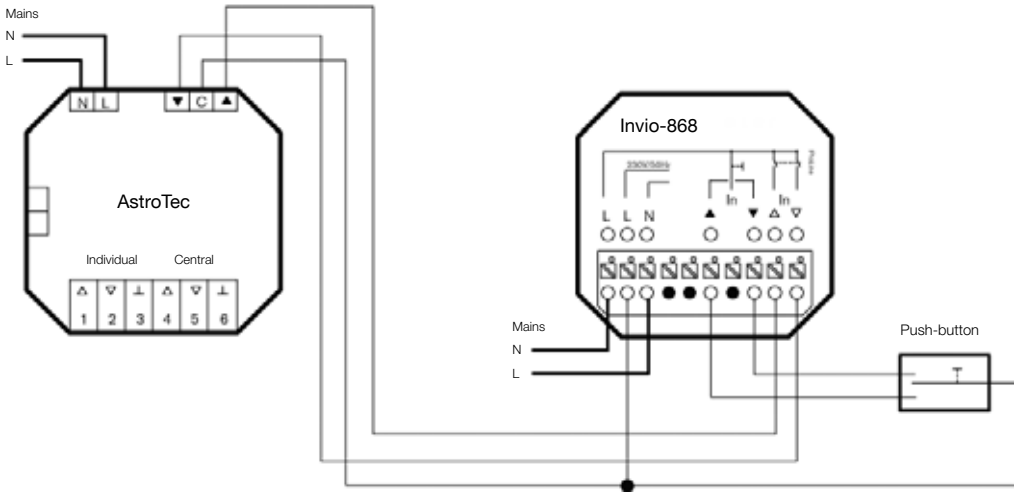

Revio-868 P, VarioTec, Revio-868

Tubular drive connection

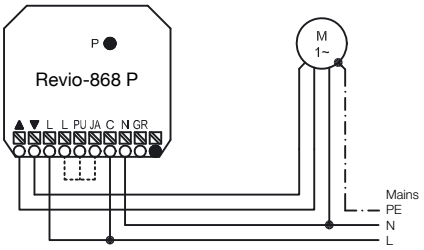

Tubular drive connection

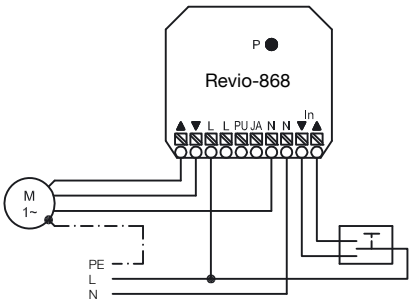

ProLine connection

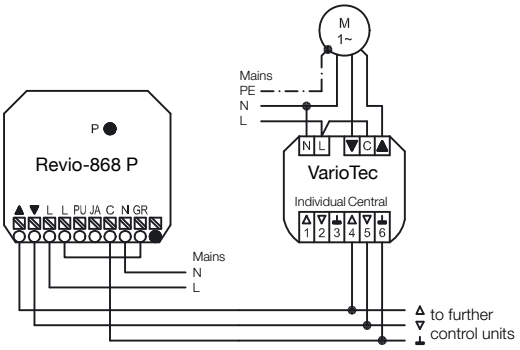

Venetian blind connection

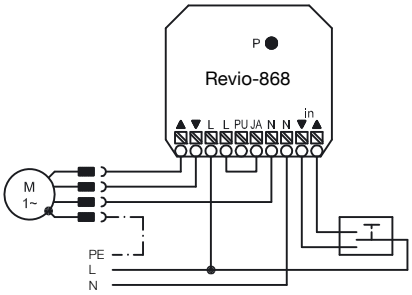

Connection of drive and control unit from another manufacturer

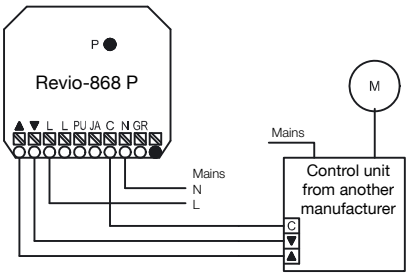

Venetian blind connection with pulse function

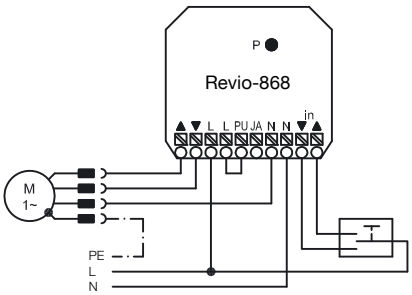

elero GmbH
Maybachstrasse 30
73278 Schlierbach
Germany
www.elero.com

© elero. DEi18 101.6001/0917. Technical parameters subject to change.